K & KRM Series

Click the appropriate link below for the major component of the liftgate for which you are trying to find the correct part. If you are unsure of the name of the part in Waltco terminology, click the "Liftgate Terminology" link and it will take you to a document showing a picture of the liftgate with the common Waltco names for each of the parts.

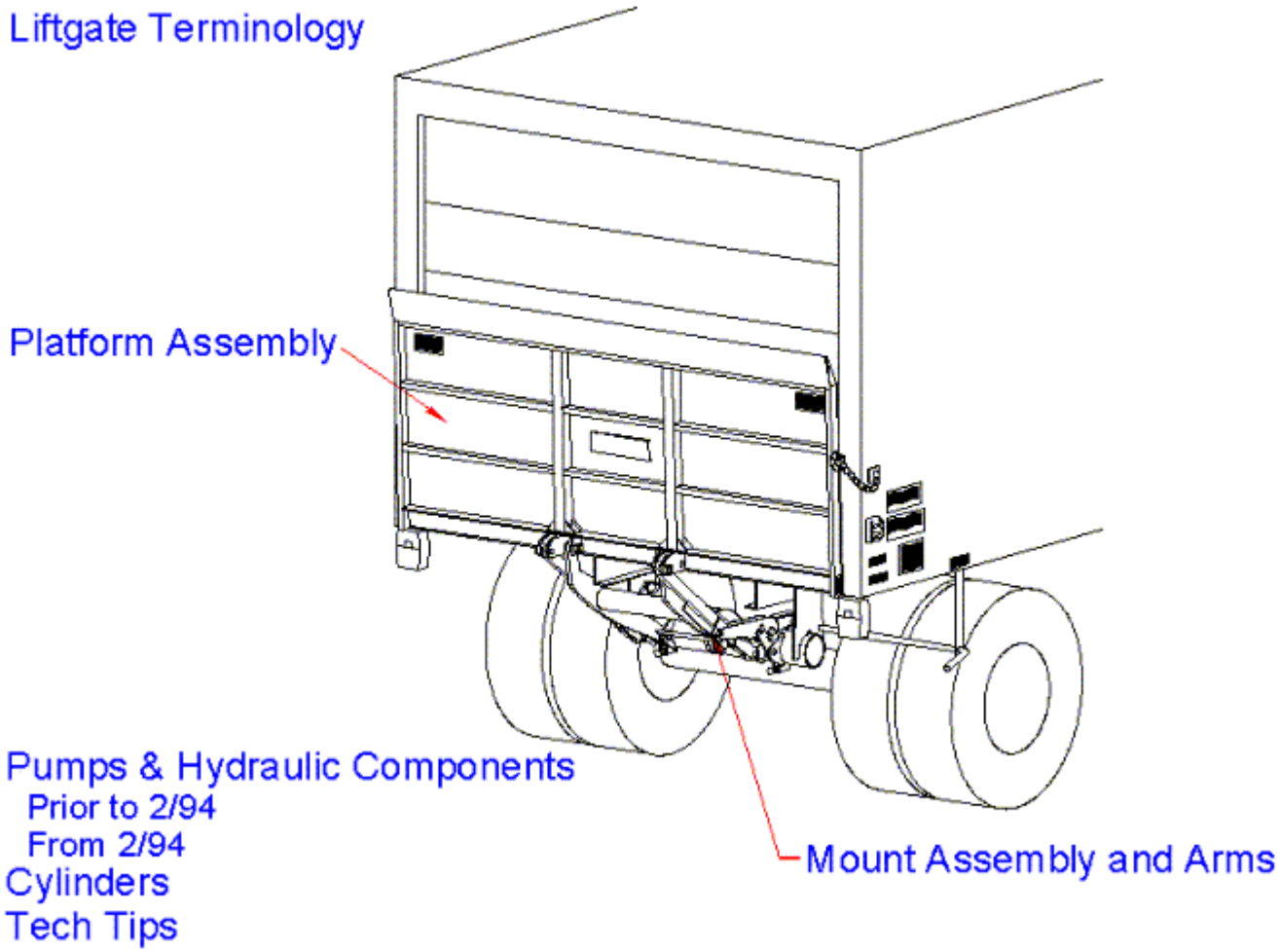

© 2009 Waltco Lift Corp. All rights reserved

K & KRM-Series Liftgate Terminology

1. Hydraulic Cylinder
2. Return Line
3. Reservoir Plug
4. Breather
5. Lowering Solenoid
6. Pump Unit Starter Solenoid
7. Pump Unit Motor
8. Pump Unit Reservoir
9. Hose Assembly
10. Hose Fitting
11. Return Line Barbed Fitting
12. Flow Control Valve
13. Drain Plug

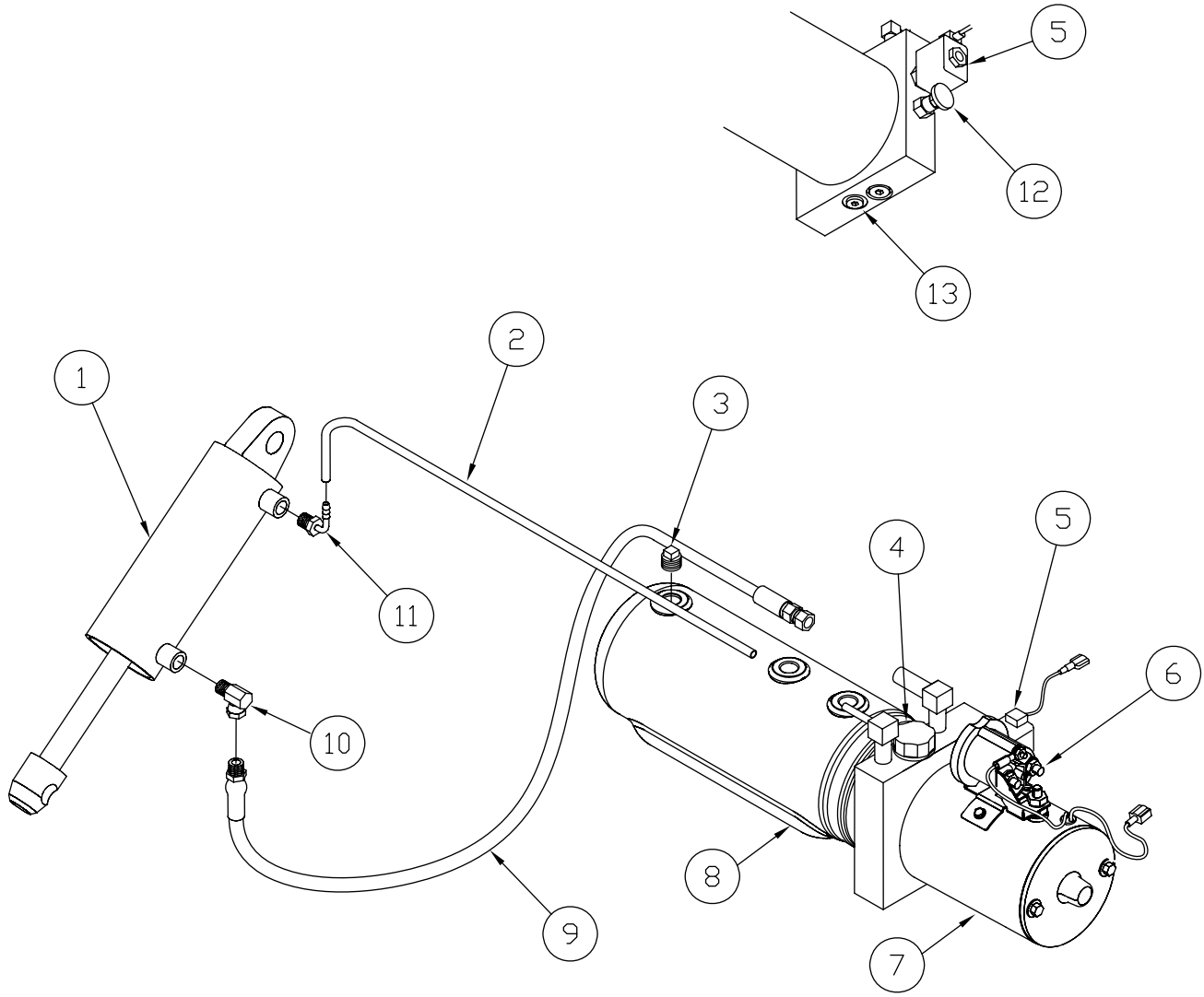

GR02518

© 2009 Waltco Lift Corp. All rights reserved

K & KRM-Series Liftgate Terminology

14. Platform
15. Lift Arm Assembly
16. Hydraulic Cylinder
17. Mount Plate
18. Mount Tube Assembly
19. Cam Assembly
20. Closer Linkage Assembly
21. Parallel Arm
22. Closer Handle
23. Spec Tag
24. Latch Chain
25. Latch Chain Clip

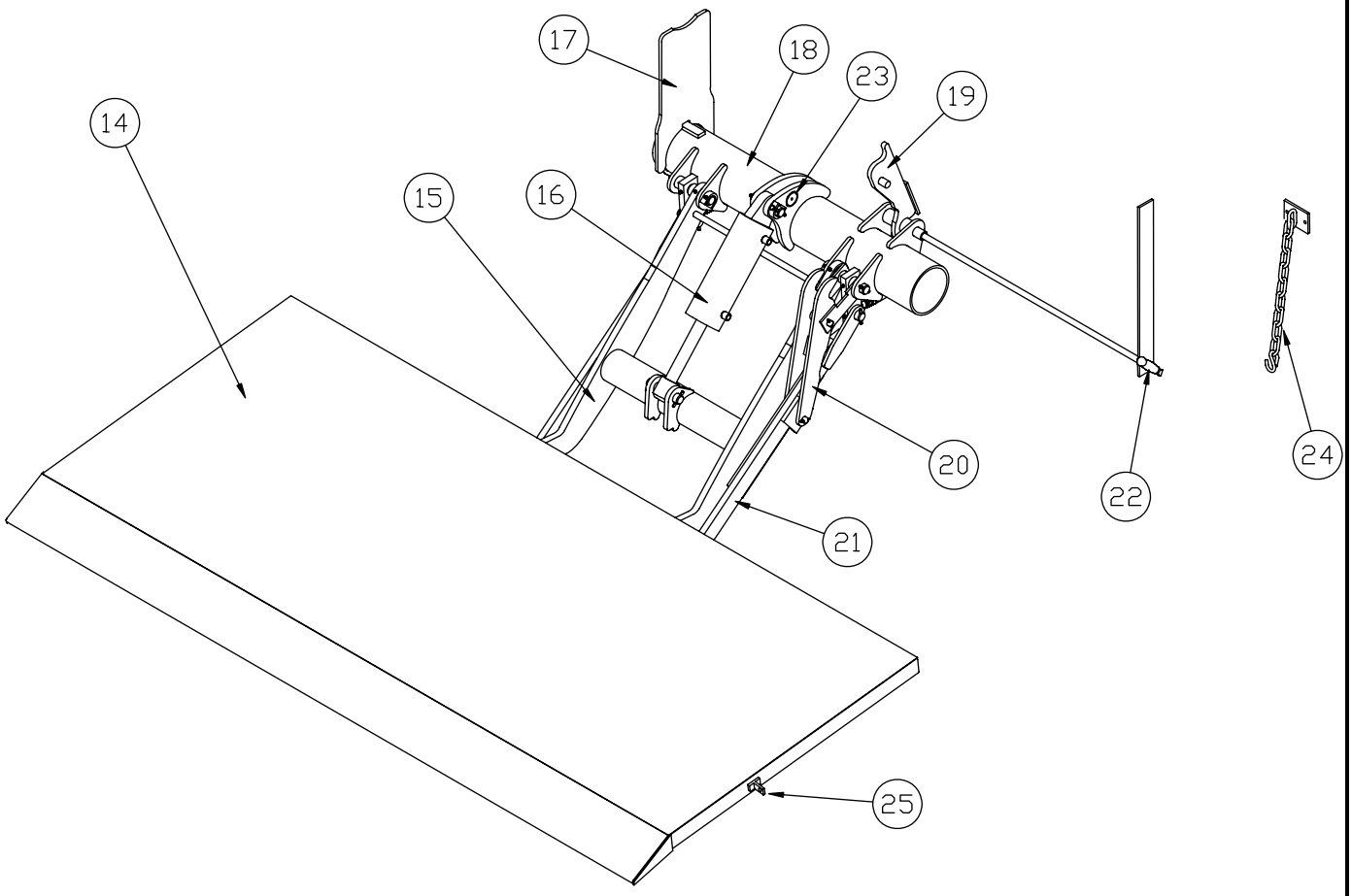

GR02517

© 2009 Waltco Lift Corp. All rights reserved

K & KRM-Series Liftgate Terminology

Explanation of Specification Tag

Model No.	Model Name	Description	Capacity
121R	K-16RM	Flipaway	1600 lbs.
122R	K-20RM	Flipaway	2000 lbs.

MODEL NUMBER

RATED CAPACITY
Based on an evenly distributed load on the platform flat surface.

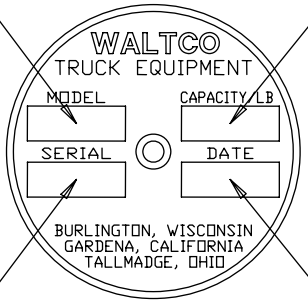

SERIAL NUMBER
of liftgate. To be used when ordering parts or when contacting Waltco for service or warranty questions

DATE OF MANUFACTURE
Month / Year

GR00241

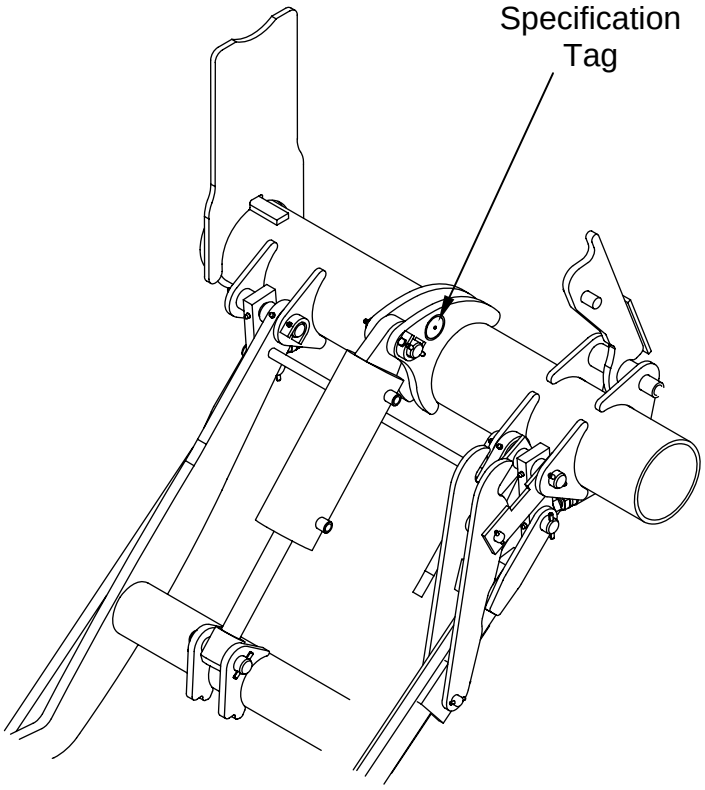

GR02517

© 2009 Waltco Lift Corp. All rights reserved

K & KRM SERIES PLATFORM ASSEMBLY

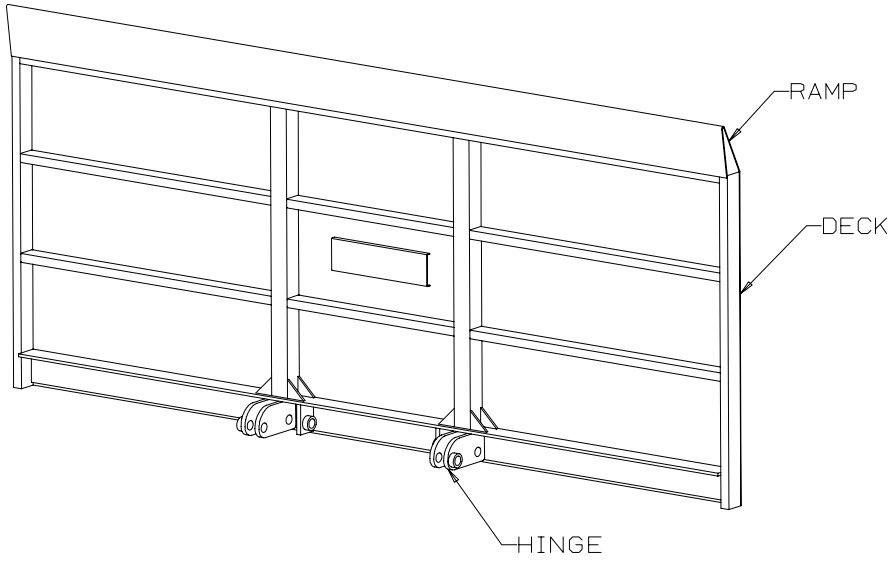

Common Features

- Sizes: 30 x 84, 90 + 6
  36 x 84, 90 + 6
- 4-1/4" hinge
- 1" deck pins with coil pins
- No closure on platform
- Reduced Maintenance (KRM) released 5-03
- **K-16 Discontinued 4-09**

Capacity Decal	**K16** 1600 Pounds	**K20** 2000 Pounds

Hinge

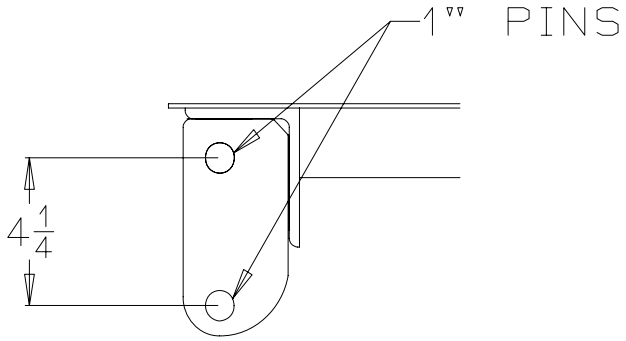

PM-186 (Built thru 5-03)

PM-186A (Built from 5-03)

80101065 Rev. 03 8/09

Click here for list of liftgate serial numbers, organized by approximate ship dates.

© 2009 Waltco Lift Corp. All rights reserved

K-SERIES MOUNT ASSEMBLY

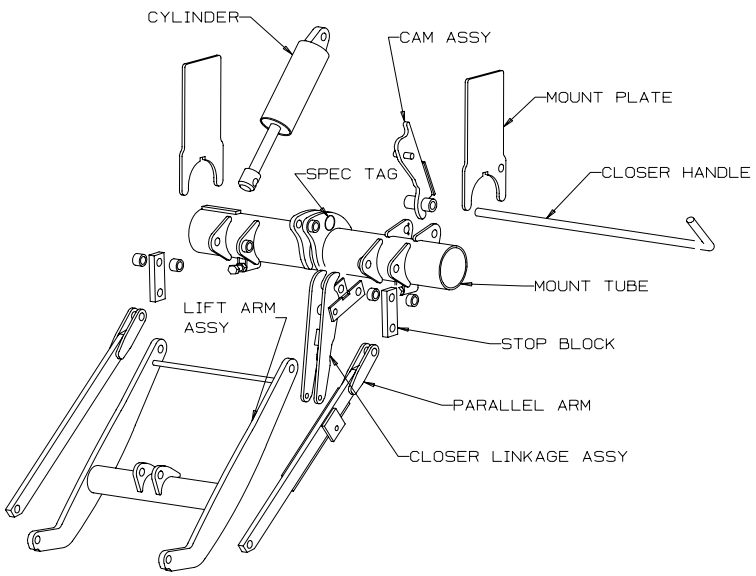

Common Features

- Narrow arm design
- Round mount tube (5-9/16" O.D. x 37" O.A.L.)
- Closure linkage assembly with cam
- Rectangular mount plate
- Hole in curb side mount plate (closure handle)
- Lift and parallel arms (27" or 32" hole centers)
- Lift and parallel arms (3/4" thick)
- Reduced Maintenance (KRM) released 5-03
- **K-16 Discontinued 4-09**

PM-186 (Built thru 5-03)

PM-186A (Built from 5-03)

80101066 Rev. 03 8/09

- K20 lift arm has stiffener on lift tube.
- "K" valve mounted with cam assembly was eliminated 9/94.

Click here for list of liftgate serial numbers, organized by approximate ship dates.

© 2009 Waltco Lift Corp. All rights reserved

K-16, 20 MOUNT FRAME AND PLATFORM ASSEMBLY
(Built thru 5-03)

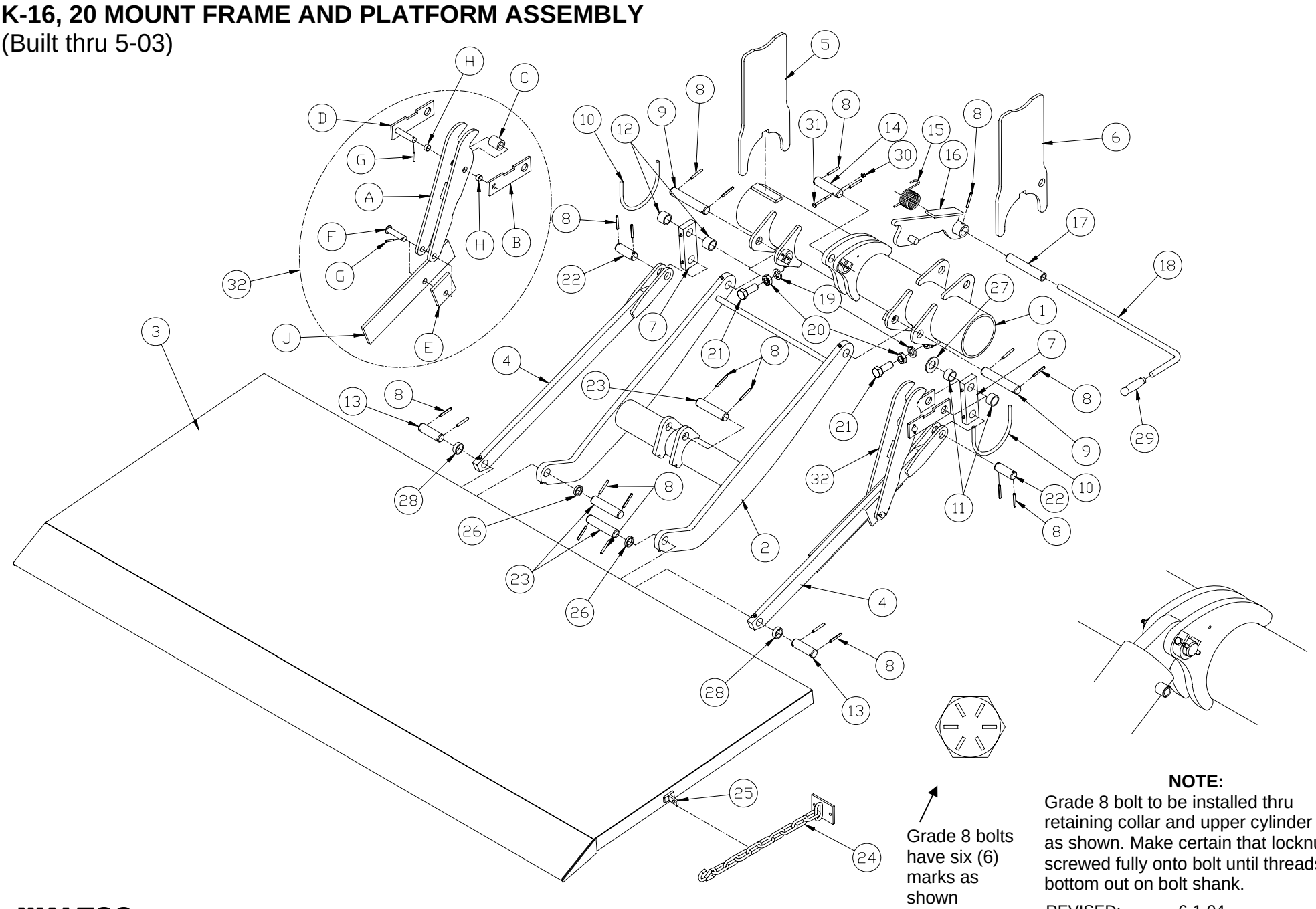

NOTE:
Grade 8 bolt to be installed thru retaining collar and upper cylinder pin as shown. Make certain that locknut is screwed fully onto bolt until threads bottom out on bolt shank.

REVISED: 6-1-04
E.O. 5221C
REV. 06

WALTCO
TRUCK EQUIPMENT CO.
K-16, 20

PM-186

ITEM	PART NUMBER	QTY	DESCRIPTION
1	12120000	1	Mount Frame Assembly
2	12130027	1	27" Lift Arm Assembly (K-16 Only)
	12130032	1	32" Lift Arm Assembly (K-16 Only)
	12230027	1	27" Lift Arm Assembly (K-20 Only)
	12230032	1	32" Lift Arm Assembly (K-20 Only)
3	12111000	1	Platform Assembly (Specify Platform Size)
4	12155027	2	27" Parallel Arm
	12155032	2	32" Parallel Arm
5	25170100	1	Mount Plate
6	12170100	1	Mount Plate
7	12151001	2	Stop Block (Level Ride)
	12151002	2	Stop Block (Half Dip)
8	75089541 [ABC]	22	1/4" x 1-7/8" Coiled Pin
9	20270700 [A]	2	Pin
10	11170300	2	Bolt
11	10110900	2	3/4" Spacer
12	10171701	2	1" Spacer
13	20411201 [A]	2	Pin
14	11170502 [ABC]	1	Upper Cylinder Pin
15	13027100	1	Spring
16	12126000	1	Cam Assembly
17	13027200 [A]	1	Pin
18	13027300	1	Closer Handle
19	75088087	2	3/4" Lock Washer
20	75085015	2	3/4"-10 Jam Nut
21	75086180	2	3/4"-10 x 2" Hex Head Screw
22	20211200 [A]	2	Pin
23	11171500 [ABC]	3	Pin
24	10193000	1	Latch Chain Assembly
25	10111700	1	Chain Clip
26	10410900	2	1/4" Spacer
27	75088061	1	1" Washer
28	10210900	2	7/16" Spacer
29	75089330	1	Rubber Grip
30	75085175 [ABC]	1	1/4"-20 Locknut
31	75086215 [ABC]	1	1/4"-20 x 2-1/2" Bolt (Grade 8)
32	12129000	1	Closer Linkage Assembly Includes the Following Parts:

ITEM	PART NUMBER	QTY	DESCRIPTION
A	12129500	1	Main Link Assembly
B	12129100	1	Upper Link
C	10117100	1	Roller
D	12129900 [A]	1	Upper Link Sub-Assembly
E	13029300	1	Lower Link
F	13028500 [A]	1	Pin Assembly
G	75089548 [A]	2	3/16" x 1-1/4" Coiled Pin
H	13029600	2	Bearing
J	12129300	1	Lower Link Plate

[A] Included in Pin Replacement Kit, No. 80003290.
[B] Included in Cylinder Replacement Kit 80000939.
[C] Included in Cylinder Replacement Kit 80000940.

© 2009 Waltco Lift Corp. All rights reserved

KRM-16, 20 MOUNT FRAME AND PLATFORM ASSEMBLY
(Built from 5-03)

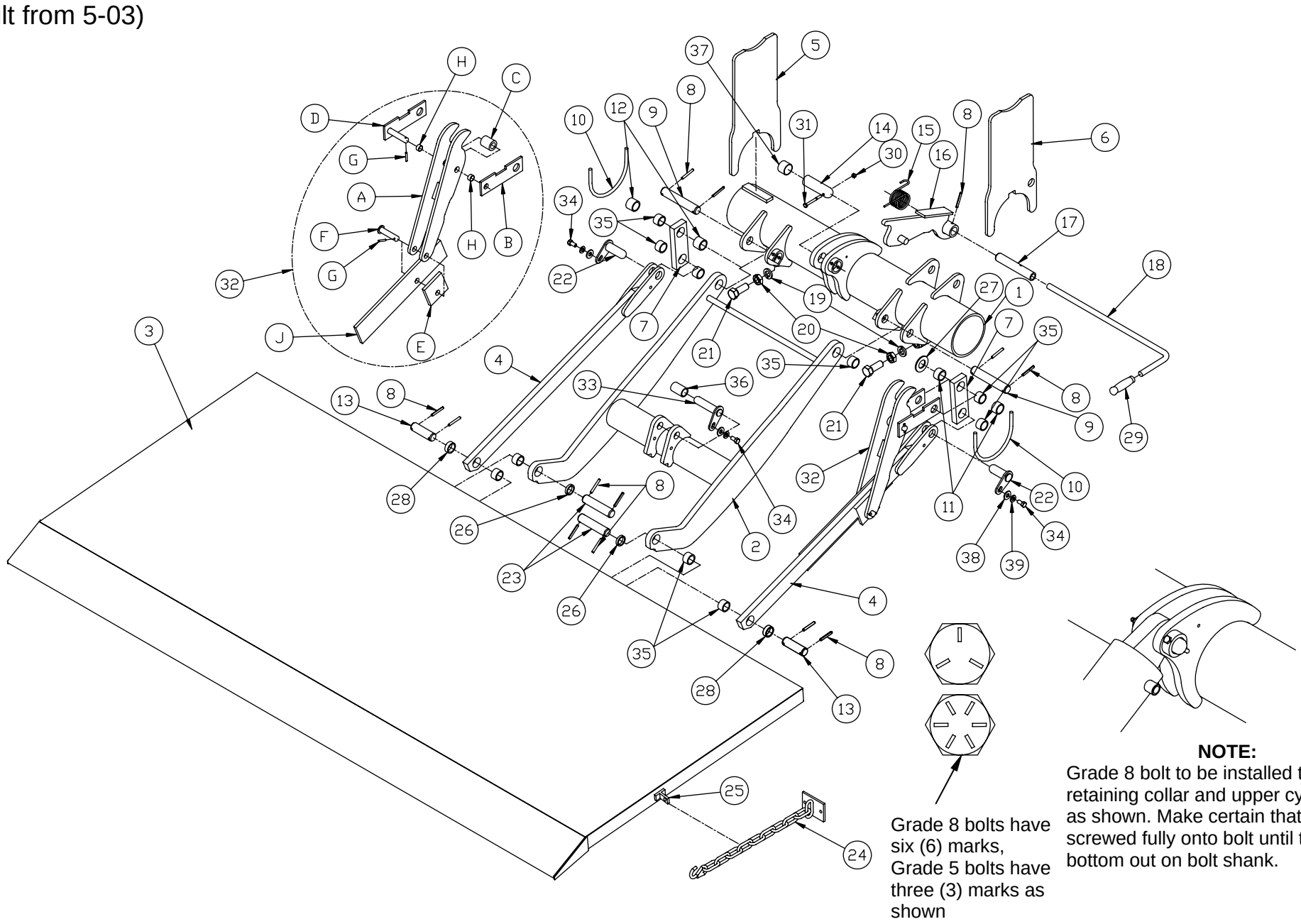

WALTCO LIFT CORP.
KRM-16, 20

REVISED: 2-15-10
E.O. 6363
REV. 05

PM-186A

ITEM	PART NUMBER	QTY	DESCRIPTION
1	12120001	1	Mount Frame Assembly
2	12230227	1	27" Lift Arm Assembly
	12230232	1	32" Lift Arm Assembly
3	12111000	1	Platform Assembly (Specify Platform Size)
4	12155227	2	27" Parallel Arm
	12155232	2	32" Parallel Arm
5	25170100	1	Mount Plate
6	12170100	1	Mount Plate
7	12151201	2	Stop Block (Level Ride)
	12151202	2	Stop Block (Half Dip)
8	75089541 [AD]	13	1/4" x 1-7/8" Coiled Pin
9	20270700 [A]	2	Pin
10	11170300	2	Bolt
11	10110900	2	3/4" Spacer
12	10171701	2	1" Spacer
13	20411201 [A]	2	Pin
14	22170400 [ABC]	1	Upper Cylinder Pin
15	13027100	1	Spring
16	12126000	1	Cam Assembly
17	13027200 [A]	1	Pin
18	13027300	1	Closer Handle
19	75088087	2	3/4" Lock Washer
20	75085015	2	3/4"-10 Jam Nut
21	75086180	2	3/4"-10 x 2" Hex Head Screw
22	23370800 [A]	2	Pin
23	11171500 [A]	2	Pin
24	10193000	1	Latch Chain Assembly
25	10111700	1	Chain Clip
26	10410900	2	1/4" Spacer
27	75088061	1	1" Washer
28	10210900	2	7/16" Spacer
29	75089330	1	Rubber Grip
30	75085175 [ABCD]	1	1/4"-20 Locknut
31	75086215 [ABCD]	1	1/4"-20 x 2-1/2" Bolt (Grade 8)
32	12129000	1	Closer Linkage Assembly Includes the Following Parts:
33	12170800 [ABC]	1	Lower Cylinder Pin
34	75086055 [ABCD]	3	Bolt, 3/8-16 x 3/4" Grade 5

ITEM	PART NUMBER	QTY	DESCRIPTION
35	10010142 [D]	10	Bearing, 1" I.D. x 3/4" lg.
36	10010171 [DBC]	1	Bearing, 7/8" I.D. x 1-3/4" lg.
37	10010169 [DBC]	1	Bearing, 1-1/4" I.D. x 1" lg.
38	75088053 [ABCD]	3	Flat Washer, 3/8"
39	75088081 [ABCD]	3	Lock Washer, 3/8"
A	12129500	1	Main Link Assembly
B	12129100	1	Upper Link
C	10117100	1	Roller
D	12129900 [A]	1	Upper Link Sub-Assembly
E	13029300	1	Lower Link
F	13028500 [A]	1	Pin Assembly
G	75089548 [A]	2	3/16" x 1-1/4" Coiled Pin
H	13029600	2	Bearing
J	12129300	1	Lower Link Plate

[A] Included in Pin Replacement Kit, No. 80001018.
[B] Included in Cylinder Replacement Kit 80001017.
[C] Included in Cylinder Replacement Kit 80001016.
[D] Included in Bearing Replacement Kit 80001019.

© 2009 Waltco Lift Corp. All rights reserved

K-SERIES HYDRAULICS

(Prior to 2/14/94)

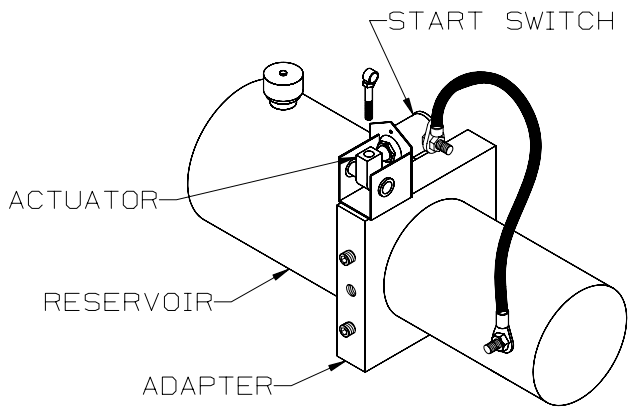

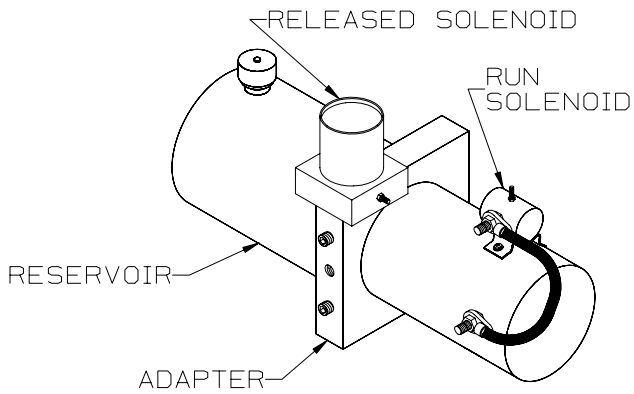

PM-110B	PM-111B

Common Features

- Fenner power unit
- Manual or electric control
- Round reservoir
- Pressure set at 2400 psi

	K-16, 20	K16, 20
	Manual **PM-110B** **22195000**	**Electric** **PM-111B** **30195000**
Control	Start switch with actuator	Release solenoid Run solenoid
Motor	Spline	Spline
Hydraulic Layout	**PM-183**	**80100400**

Cylinder	**K-16**	**K-20**
	PM-210	**PM-209**

80101101 Rev. 02 6/04

Click here for list of liftgate serial numbers, organized by approximate ship dates.

© 2009 Waltco Lift Corp. All rights reserved

K-SERIES ELECTROPAK

(Manufactured after 2/14/94)

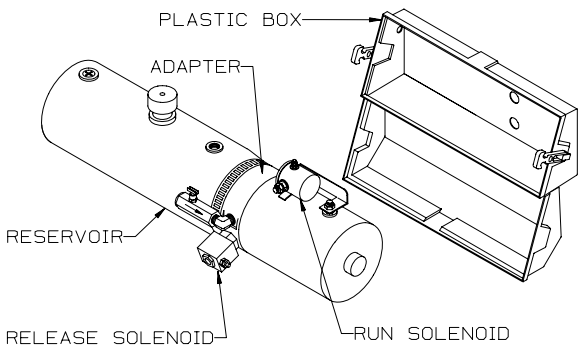

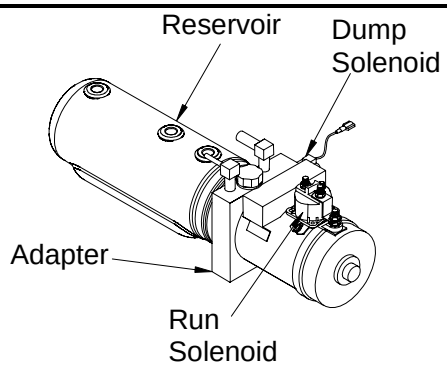

K-16, 20 & KRM-16, 20 (Built thru 7-04)	KRM-16, 20 (Built from 7-04)

Common Features

- Monarch power units with ElectroPak® or Thermalpak® decal
- Electric control
- Pump units shipped with weather box
- Pressure set at 2400 psi
- Reduced Maintenance (KRM) released 5-03
- Thermalpak® discontinued 6-07
- Added Thermal protection to all pumps after 6-07

	K-16, K-20 & KRM 16, 20			
Hydraulic Layout	**PM-183A** (Built thru 5-03) **PM-183B** (Built from 5-03 thru 7-04) **PM-183C** (Built from 7-04 thru 5-10) **PM-183D** (Built from 5-10)			
Electrical Layout	**PM-343** (Built thru 7-04) **PM-617** (Built from 7-04 trhu 7-08) **PM-617A** (Built from 7-08 thru 8-09) **PM-617B** (Built from 8-09)			
Pump Unit	**Electropak®**		**Thermalpak®**	
	PM-643 (Built thru 7-04) **PM-645** (Built from 7-04)		**PM-645** (Built from 7-04)	
Cylinder	**K-16**	**K-20**	**KRM-16**	**KRM-20**
	PM-210	**PM-209**	**PM-470**	**PM-471**

80101102 Rev. 04 3/11

Click here for list of liftgate serial numbers, organized by approximate ship dates.

© 2009 Waltco Lift Corp. All rights reserved

ELECTRO HYDRAULIC LAYOUT
(Built thru 2-94)

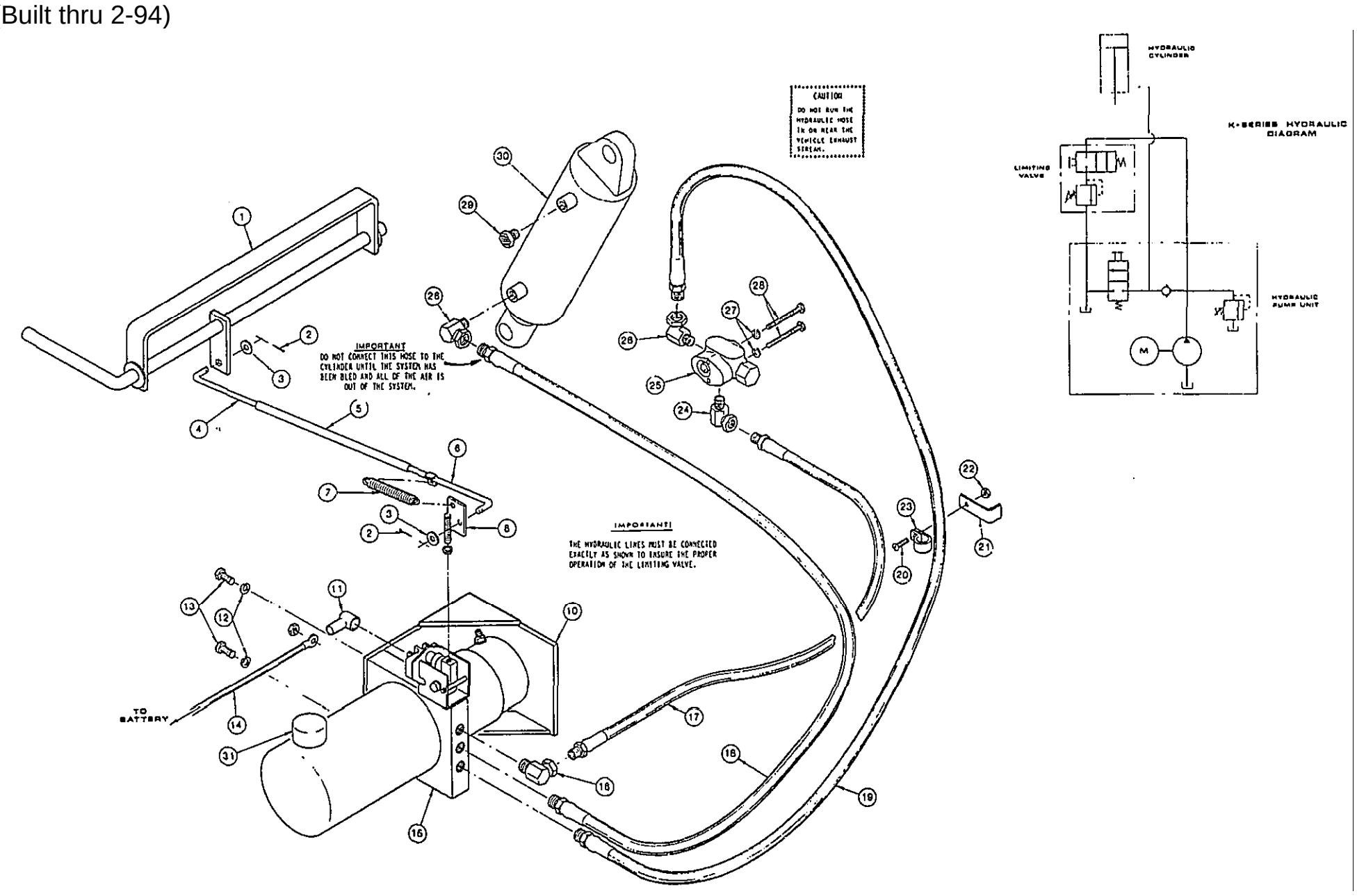

WALTCO
TRUCK EQUIPMENT CO.
K Series

REVISED: 6-1-04
E.O. 5221C
REV. 03

PM-183

ITEM	PART NUMBER	QTY	DESCRIPTION
1	10194000	1	Control Assembly
2	75084053	2	3/32" Dia. x 1" Cotter Pin
3	75088052	2	5/16" Flat Washer
4	10191100	1	Control Rod
5	10191200	1	Control Rod Tube
6	20291000	1	Control Rod
7	75089751	1	1/2" Dia. x 4" Extension Spring
8	22194000	1	Valve Lever Assembly
10	10194500	1	Pump Bracket
11	75089327	1	Rubber Boot
12	75088081	2	3/8" Lock Washer
13	75086055	2	3/8"-16 x 3/4" Hex Bolt (Grade 5)
14	10195625	1	2 Ga. x 25 Ft. Battery Cable
15	22195000 [B]	1	Hydraulic Pump Unit
16	75083035	1	3/8" Male x 1/4" Female 90° Elbow
17	75083062	1	1/4" ID x 48" Hose Assembly
18	75083069	1	3/8" ID x 65" Hose Assembly
19	75083057	1	3/8" ID x 54" Hose Assembly
20	75086732	3	#10-32 x 1" Machine Screw
21	10196300	3	Hose Clamp Clip
22	75085000	3	#10-32 Hex Nut
23	75083044	1	1/4" Hose Clamp
	75083045	2	3/8" Hose Clamp
24	75083031	1	1/4" x 90° Swivel Elbow
25	70115000 [A]	1	Limiting Valve [A]
26	75083037	2	1/4" Male x 3/8" female 90° Elbow
27	75088079	2	1/4" Lock Washer
28	75086012	2	1/4"-20 x 2-1/2" Hex Bolt
29	75089315	1	Breather
30	22180050	1	Lift Cylinder (K-16)
	22280050	1	Lift Cylinder (K-20)
31	70091270	1	Breather Cap

A This valve has been discontinued. Order kit 80000638 to eliminate this valve. Contact Waltco Technical Support for any questions about removing this valve.
B. When ordering a complete replacement pump, please use part number 70400300

© 2009 Waltco Lift Corp. All rights reserved

HYDRAULIC LAYOUT FOR ELECTRIC CONTROL
(Built thru 2-94)

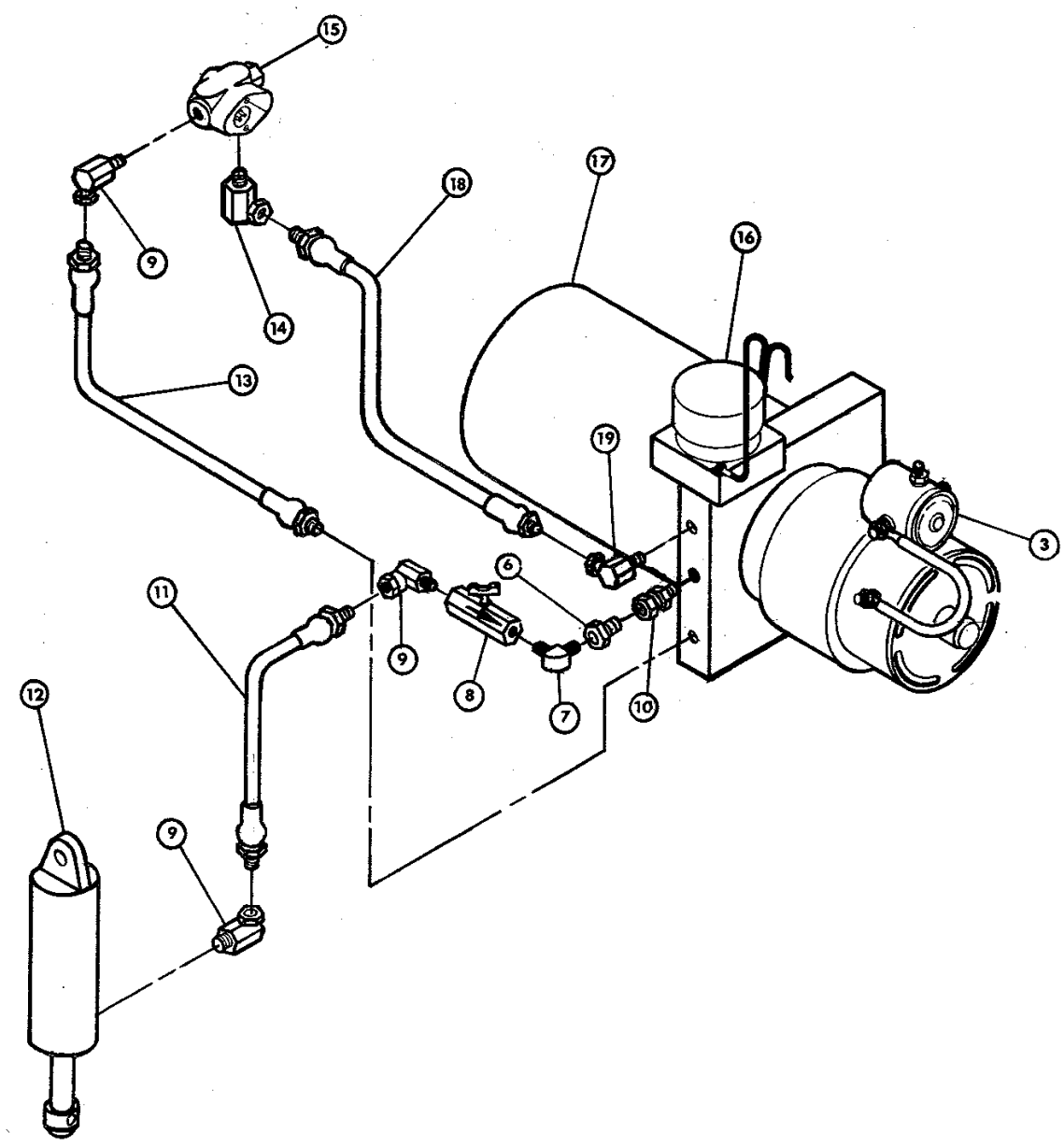

WALTCO
TRUCK EQUIPMENT CO.
K-16, 20

REVISED: 9-1-04
E.O. 5221F
REV. 03

80100400

ITEM	PART NUMBER	QTY	DESCRIPTION
3	80001065	1	Solenoid Kit
6	75082908	1	Adapter
7	75082611	1	90° Elbow
8	70189860	1	Flow Control Valve
9	75083037	3	90° Swivel Elbow
10	75082914	1	Swivel Adapter
11	75083069	1	Hose Assembly
12	22180050	1	Lift Cylinder (K-16 Only)
	22280050	1	Lift Cylinder (K-20 Only)
13	75083057	1	Hose Assembly
14	75083031	1	90° Swivel Elbow
15	70115000 [A]	1	Limiting Valve
16	70091631	1	Release Solenoid
17	30195000 [B]	1	Hydraulic Pump Unit
18	75083062	1	Hose Assembly
19	75083035	1	Swivel Elbow

A This valve has been discontinued. Order kit 80000638 to eliminate this valve. Contact Waltco Technical Support for any questions about removing this valve.
B. When ordering a complete replacement pump, please use part number 70400125

© 2009 Waltco Lift Corp. All rights reserved

ELECTRIC CONTROLS ELECTROPAK
(Built 2-94 thru 5-03)

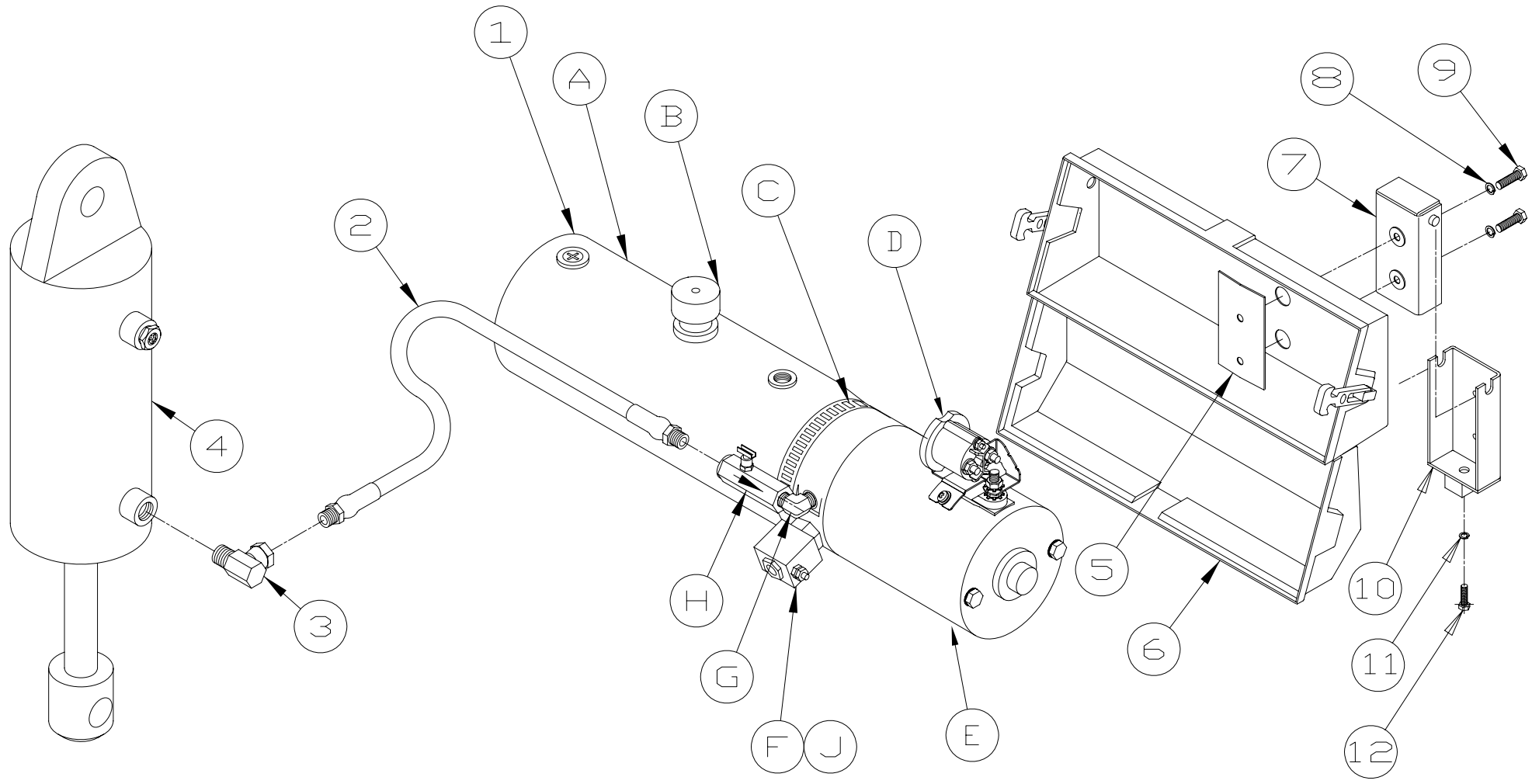

WALTCO
TRUCK EQUIPMENT CO.
K-16, 20

REVISED: 8-1-09
E.O. 6251
REV. 08

PM-183A

ITEM	PART NUMBER	QTY	DESCRIPTION
1	70400125 [K]	1	Hydraulic Pump Unit
A	70400001 [J]	1	Hydraulic Reservoir
B	70091734 [J]	1	Breather
C	70400002 [J]	1	Reservoir Clamp
D	80001065 [JA]	1	Solenoid
E	7043001-1 [JA]	1	Motor
F	70092503 [J]	1	Valve Assembly, 2-way, 2 position w/ Coil
G	75082611 [J]	1	90° Male Elbow
H	70189860 [J]	1	Flow Control Valve
J	70402303 [J]	1	Coil, 10V, 25A
2	75083074	1	3/8” I.D. x 65” Hose Assembly
3	75083031	1	90° Swivel Elbow
4	22180050 [L]	1	Hydraulic Cylinder (K-16 Only)
	22280050 [M]		Hydraulic Cylinder (K-20 Only)
5	10021400 [K]	1	Pump Bracket Plate
6	10090500 [K]	1	Pump Cover Assembly
7	10021000 [K]	1	Pump Mounting Bracket
8	75088081 [K]	2	3/8” Lock Washer
9	75086056 [K]	2	3/8”-16 x 1”, Grade 5 Hex Bolt
10	10021500	1	Pump Mounting Bracket
11	75088083	1	1/2” Lock Washer
12	75086108	1	1/2”-13 x 1-1/2” Hex Bolt

[A] Included in motor assembly 70400854
[J] Included in 70400125 Replacement Assembly.
[K] Included in 10090800 Hydraulic Replacement Assembly.
[L] Included in Cylinder Replacement Kit 80000939.
[M] Included in Cylinder Replacement Kit 80000940.

© 2009 Waltco Lift Corp. All rights reserved

ELECTRIC CONTROLS ELECTROPAK
(Built 5-03 thru 7-04)

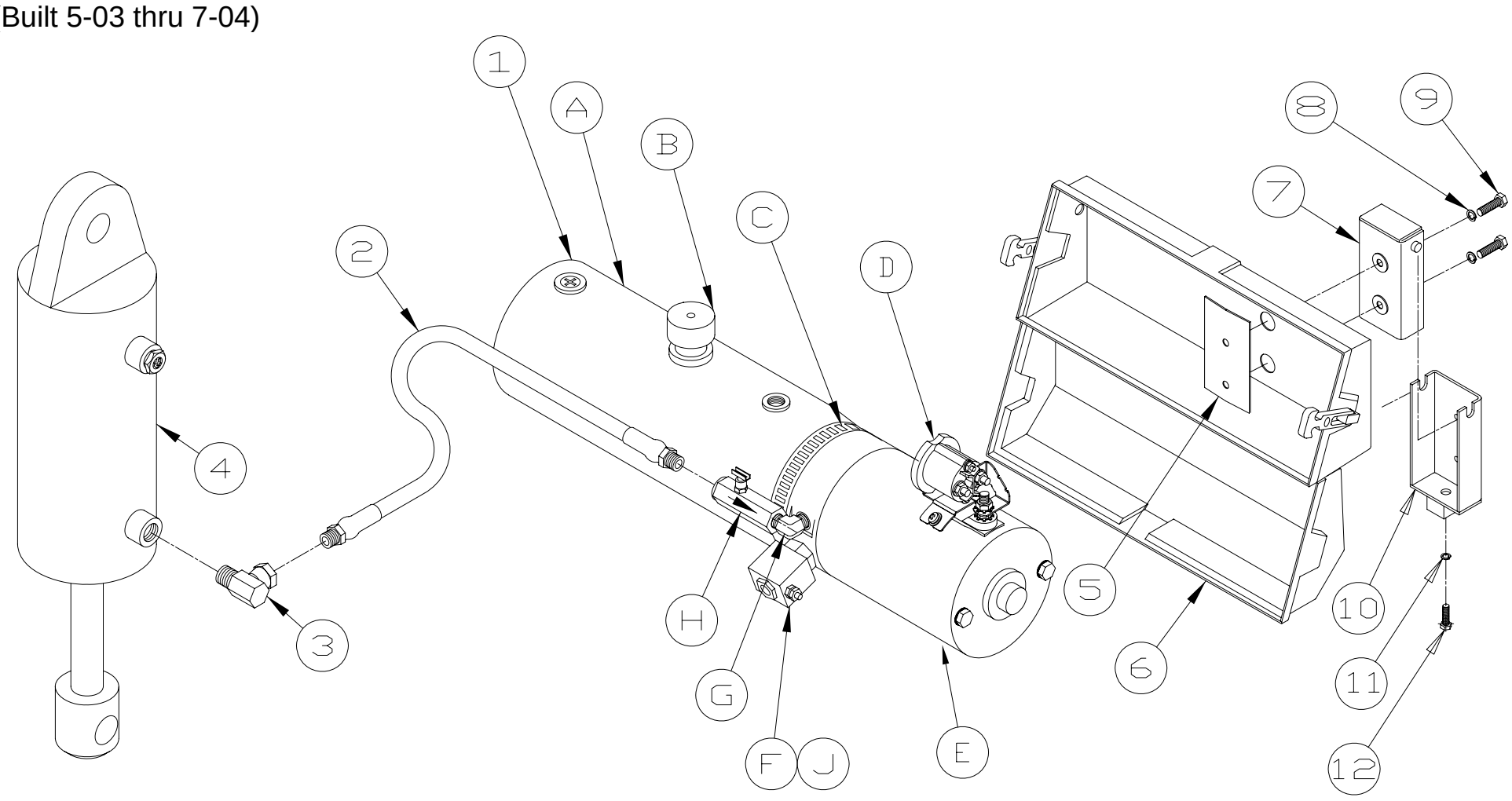

WALTCO
TRUCK EQUIPMENT CO.
KRM-16, 20

REVISED: 8-1-09
E.O. 6251
REV. 03

PM-183B

ITEM	PART NUMBER	QTY	DESCRIPTION
1	70400125 [K]	1	Hydraulic Pump Unit
A	70400001 [J]	1	Hydraulic Reservoir
B	70091734 [J]	1	Breather
C	70400002 [J]	1	Reservoir Clamp
D	80001065 [JA]	1	Solenoid
E	7043001-1 [JA]	1	Motor
F	70092503 [J]	1	Valve Assembly, 2-way, 2 position w/ Coil
G	75082611 [J]	1	90° Male Elbow
H	70189860 [J]	1	Flow Control Valve
J	70402303 [J]	1	Coil, 10V, 25A
2	75083074	1	3/8” I.D. x 65” Hose Assembly
3	75083037	1	90° Swivel Elbow
4	22180010 [L]	1	Hydraulic Cylinder (K-16 Only)
	22280010 [M]		Hydraulic Cylinder (K-20 Only)
5	10021400 [K]	1	Pump Bracket Plate
6	10090500 [K]	1	Pump Cover Assembly
7	10021000 [K]	1	Pump Mounting Bracket
8	75088081 [K]	2	3/8” Lock Washer
9	75086056 [K]	2	3/8”-16 x 1”, Grade 5 Hex Bolt
10	10021500	1	Pump Mounting Bracket
11	75088083	1	1/2” Lock Washer
12	75086108	1	1/2”-13 x 1-1/2” Hex Bolt

[A] Included in motor assembly 70400854
[J] Included in 70400125 Replacement Assembly.
[K] Included in 10090800 Hydraulic Replacement Assembly.
[L] Included in Cylinder Replacement Kit 80001016.
[M] Included in Cylinder Replacement Kit 80001017.

© 2009 Waltco Lift Corp. All rights reserved

HYDRAULIC LAYOUT
(Built from 7-04 thru 5-10)

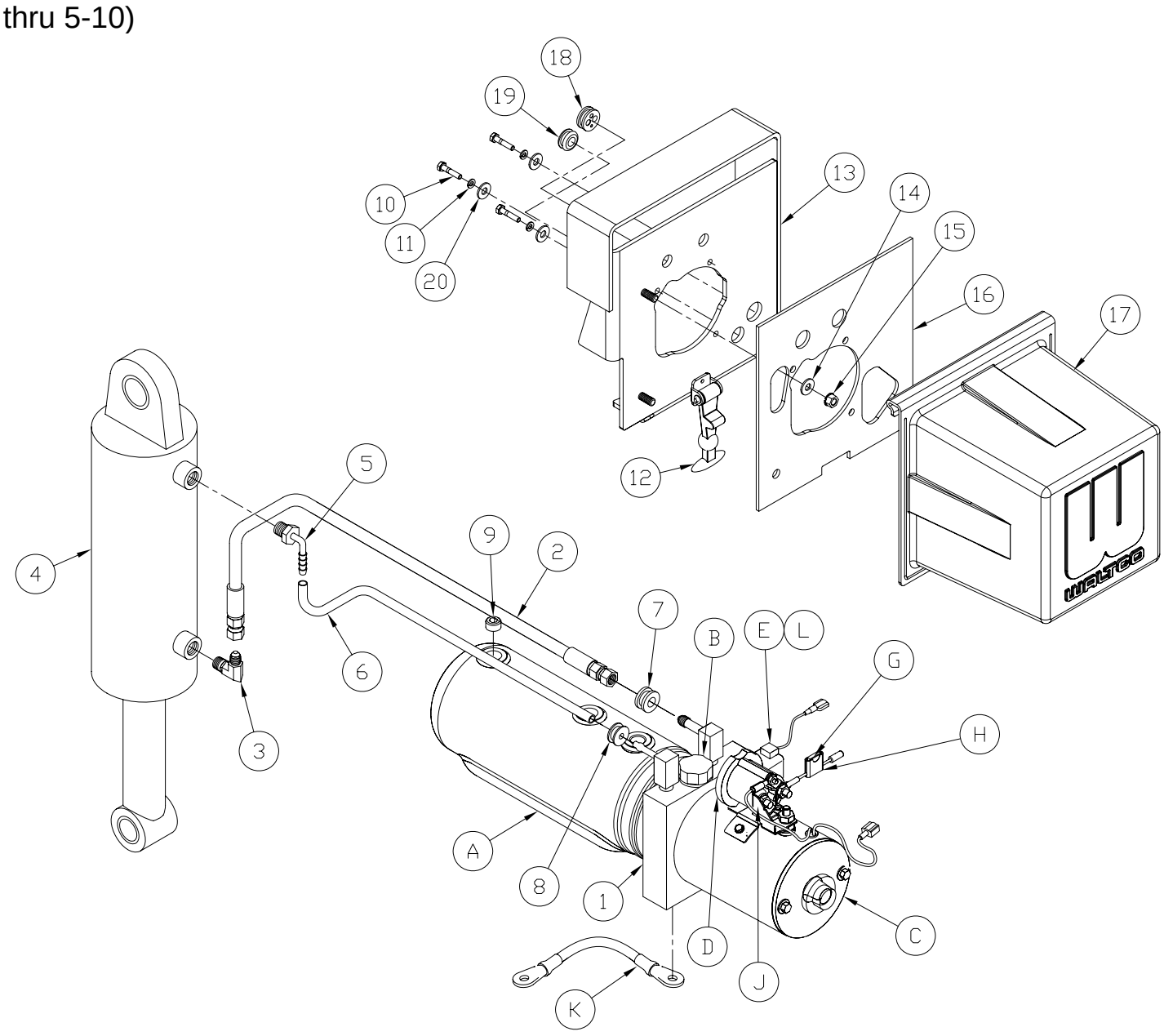

WALTCO LIFT CORP.
KRM-SERIES

REVISED: 8-1-09
E.O. 6251
REV. 07

PM-183C

ITEM	PART NUMBER	QTY	DESCRIPTION
1	70402125	1	Hydraulic Pump Unit
A	70400001 [B]	1	Hydraulic Reservoir
B	70400004 [B]	1	Breather
C	7043001-1 [BC]	1	Motor
D	75089833 [BC]	1	Starter Solenoid
E	70092503 [B]	1	Valve Assembly, 2-way, 2 position w/ Coil
G	75089854 [B]	1	15 Amp Fuse
H	10099309 [B]	1	Inline Fuse Assembly (Includes Fuse 75089853)
J	75089834 [BC]	1	Bus Bar
K	10098425 [B]	1	Ground Cable
L	70402303 [B]	1	Coil, 10V, 25A
2	75083201	1	Hose Assembly, 1/4” I.D. x 1/4” JIC, 57" lg
3	75083210	1	90° Elbow, 1/4” NPT x 1/4” JIC
4	22280010 [A]	1	Hydraulic Cylinder (K-20 Only)
5	75082745	1	Barbed Fitting, 1/4” NPTF x 1/4”, 90°
6	26299500	1	Hose, 1/4” I.D.
7	70401408	1	7/16” I.D. Grommet
8	70401409	1	1/4” I.D. Grommet
9	70091291	1	Steel Plug
10	75086212	3	Pump Mount Bolt, 1/4”-20 x 1-1/4” lg.
11	75088079	3	1/4” Lock Washer
12	27391301	1	Cover Latch
13	10023100	1	Remote Pump Mounting Bracket
14	75088052	1	Flat Washer, 5/16 SAE
15	75085003	1	Serrated Hex Nut, 5/16-18
16	10090460	1	Pump Cover Gasket
17	10090450	1	Pump Cover (with latch)
18	75090310	1	Grommet for Control Cord
19	75089334	1	Grommet for Battery Cable
20	75088051	3	5/16” Flat Washer

[A] Included in Cylinder Replacement Kit 80001017.
[B] Included in Pump Assembly 70402125.
[C] Include in motor assembly 70400854

© 2009 Waltco Lift Corp. All rights reserved

HYDRAULIC LAYOUT
(Built from 5-10)

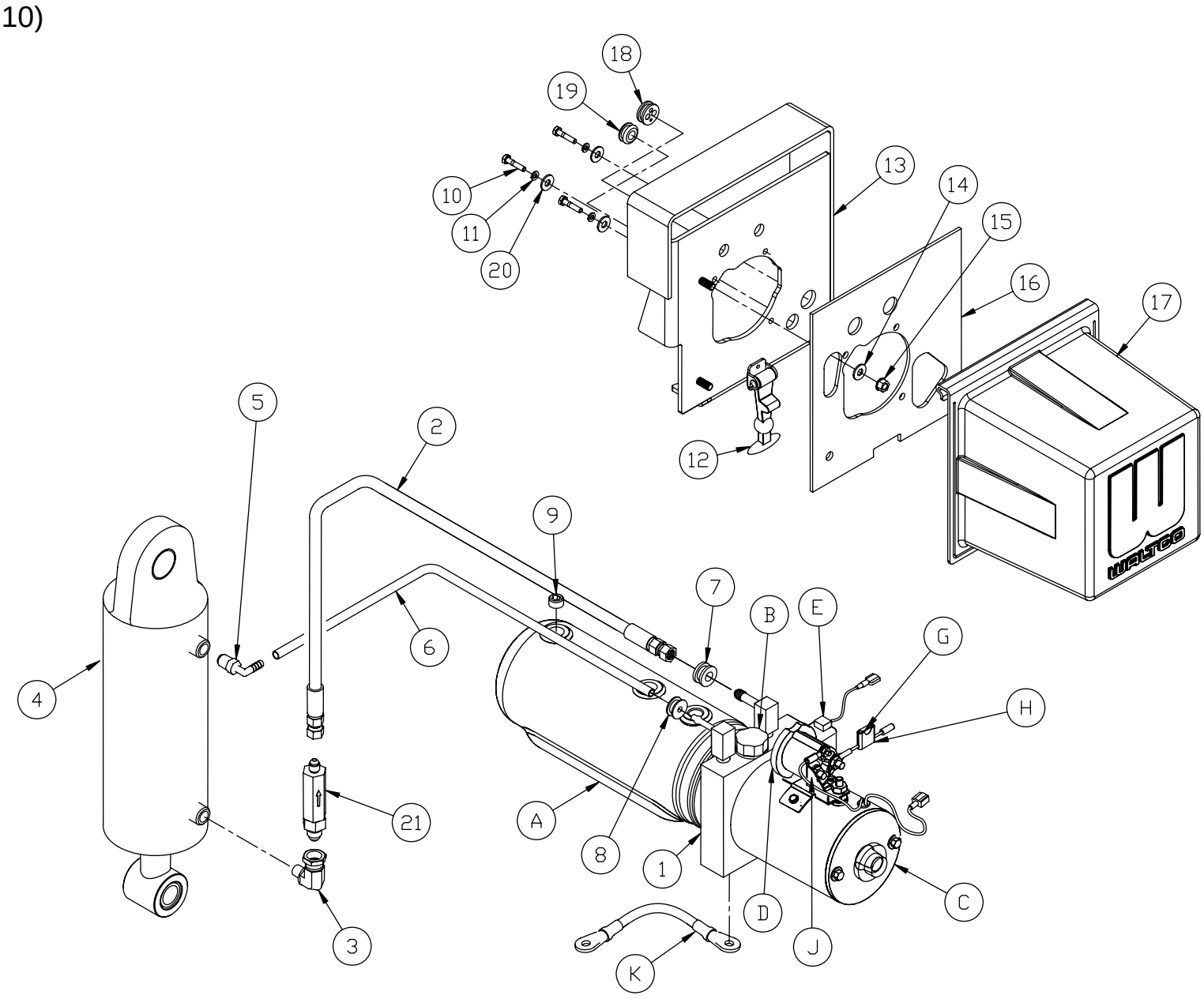

WALTCO LIFT CORP.
K-20

REVISED: 4-15-10
E.O. 6379
REV. 01

PM-183D

ITEM	PART NUMBER	QTY	DESCRIPTION
1	70402125	1	Hydraulic Pump Unit
A	70400001 [B]	1	Hydraulic Reservoir
B	70400004 [B]	1	Breather
C	70092312 [B]	1	Motor
D	75089833 [B]	1	Starter Solenoid
E	70401476 [B]	1	Valve Assembly, 2-way, 2 position
G	75089854 [B]	1	15 Amp Fuse
H	10099309 [B]	1	Inline Fuse Assembly (Includes Fuse 75089853)
J	75089834 [B]	1	Bus Bar
K	10098425 [B]	1	Ground Cable
2	75083201	1	Hose Assembly, 1/4” I.D. x 1/4” JIC, 57" lg
3	7500101-1	1	90° Elbow, 1/4” M NPT x 9/16” FM JIC
4	22280010 [A]	1	Hydraulic Cylinder
5	75082745	1	Barbed Fitting, 1/4” NPTF x 1/4”, 90°
6	26299500	1	Hose, 1/4” I.D.
7	70401408	1	7/16” I.D. Grommet
8	70401409	1	1/4” I.D. Grommet
9	70091291	1	Steel Plug
10	75086212	3	Pump Mount Bolt, 1/4”-20 x 1-1/4” lg.
11	75088079	3	1/4” Lock Washer
12	27391301	1	Cover Latch
13	10023100	1	Remote Pump Mounting Bracket
14	75088052	1	Flat Washer, 5/16 SAE
15	75085003	1	Serrated Hex Nut, 5/16-18
16	10090460	1	Pump Cover Gasket
17	10090450	1	Pump Cover (with latch)
18	75090310	1	Grommet for Control Cord
19	75089334	1	Grommet for Battery Cable
20	75088051	3	5/16” Flat Washer
21	7010001-12	1	Compensated Flow Control Valve

[A] Included in Cylinder Replacement Kit 80001017.
[B] Included in Pump Assembly 70402125.

© 2009 Waltco Lift Corp. All rights reserved

ELECTRIC CONTROL OPTIONS, GRAVITY DOWN
(Built 2-94 thru 7-04)

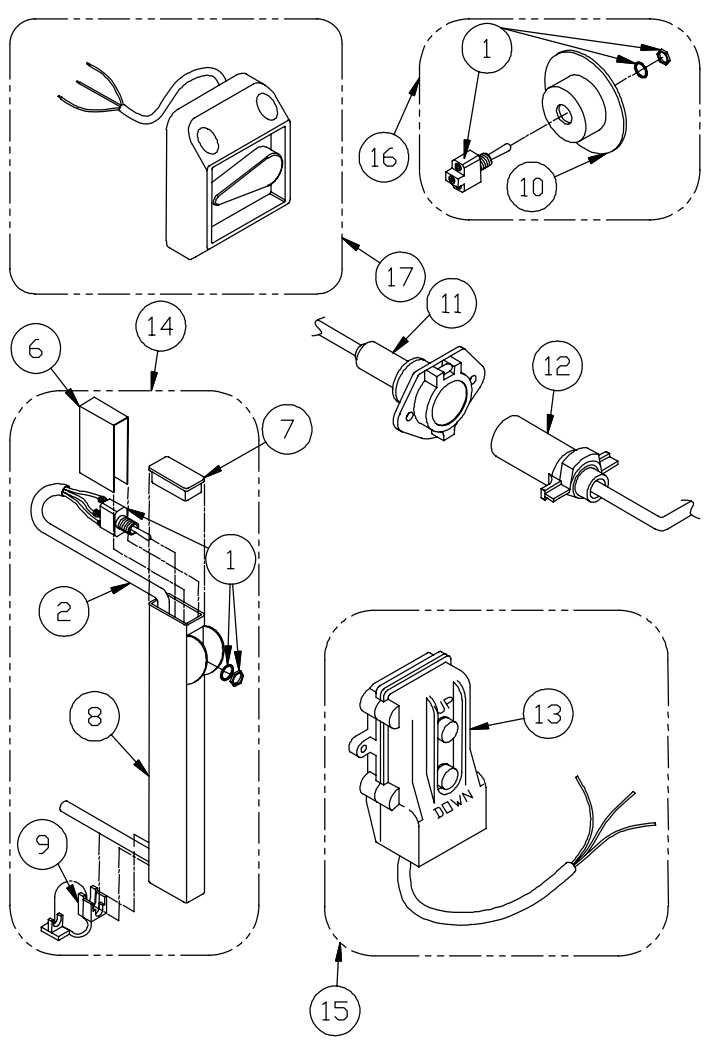

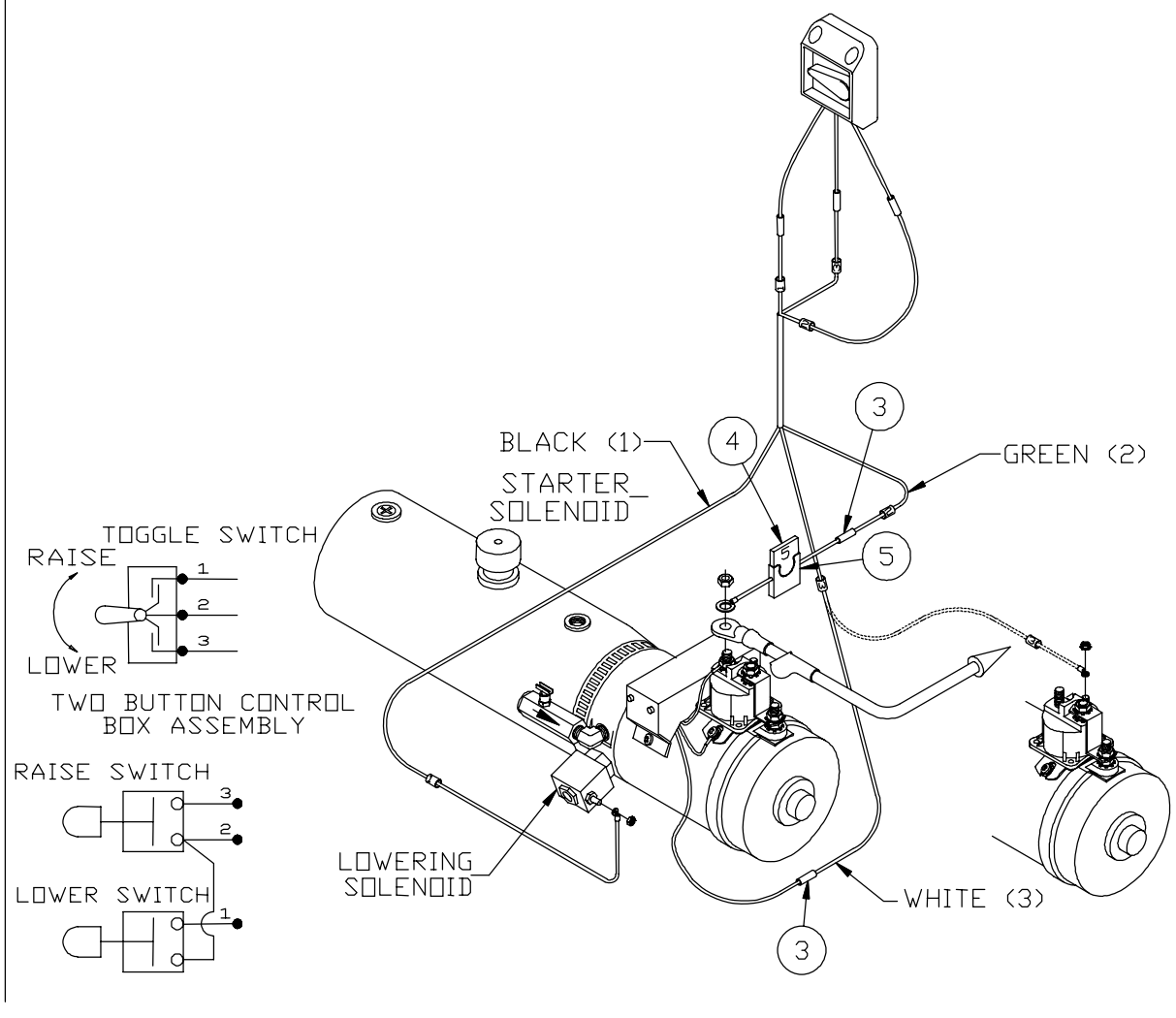

WALTCO
TRUCK EQUIPMENT CO.

REVISED: 5-1-04
E.O. 5221B
REV. 14

PM-343

ITEM	PART NUMBER	QTY	DESCRIPTION
1	75089808	1	Toggle Switch
2	10098400	1	Control Cord Assembly
3	75082033	2	16 Ga. Butt Connector
4	75089853	1	5 AMP Fuse
5	75089850	1	Fuse Holder
6	33574100	1	Dielectric Insulation
7	33520900	1	Plug
8	10098100	1	Control Tube Assembly
9	75080055	1	Strain Relief
10	75089813	1	Recessed Switch Plate
11	75082038	1	Trailer Socket
12	75082037	1	Trailer Plug
13	75089798	1	Push Button Box Assembly
*14	10098000		Toggle Switch & Tube Kit
*15	75089800	1	Remote Box Straight Cord
	75089799	1	Remote Box Coil Cord
	80000470	1	Remote Box Straight Cord w/ plug & socket
	80000469	1	Remote Box Coil Cord w/ plug & socket
*16	80000468	1	Toggle Switch Kit
*17	80000425	1	SuperSwitch Kit
	10099302	1	Remote SuperSwitch
	80000423	1	SuperSwitch Control Kit
	80000424	1	SuperSwitch Dual Control Kit
	80000799	1	Remote SuperSwitch Kit
**Boxed assemblies represent complete kits			

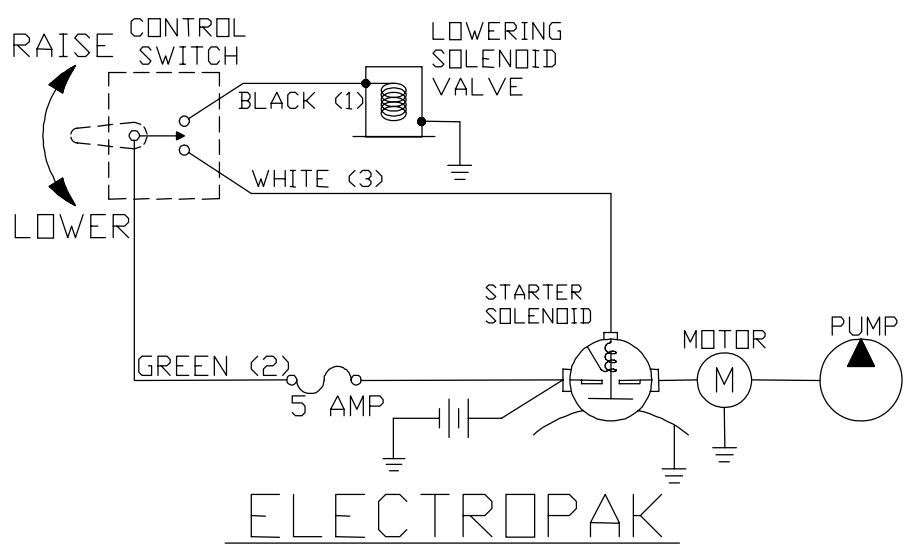

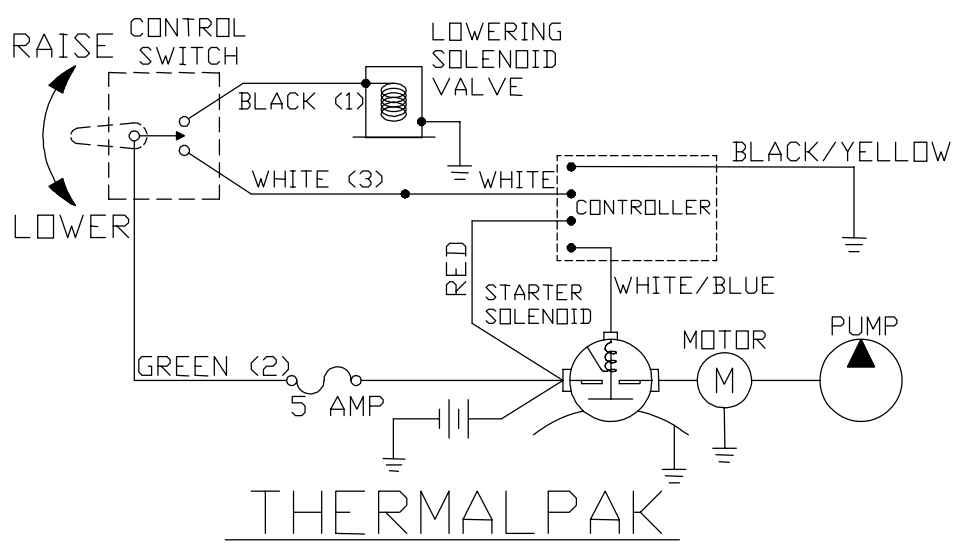

WIRE No.	COLOR	FUNCTION
1	BLACK	LOWER (DOWN)
2	GREEN	HOT (POWER)
3	WHITE	RAISE (UP)

© 2009 Waltco Lift Corp. All rights reserved

ELECTRIC CONTROL OPTIONS – Gravity Down
(Built 7-04 thru 7-08)

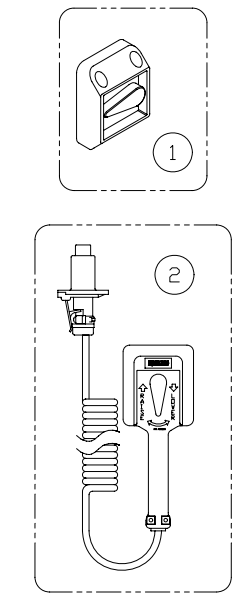

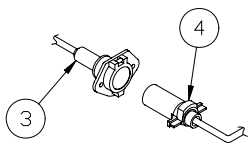

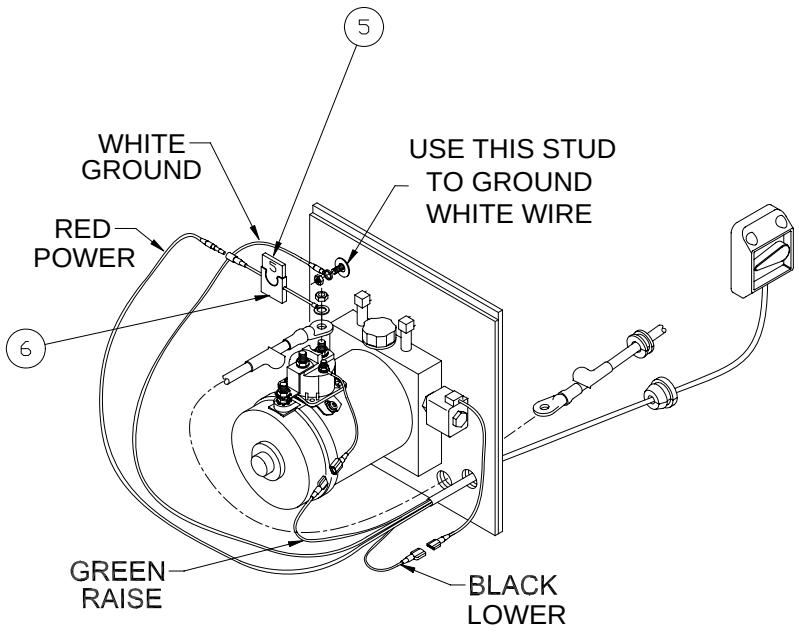

Electropak®

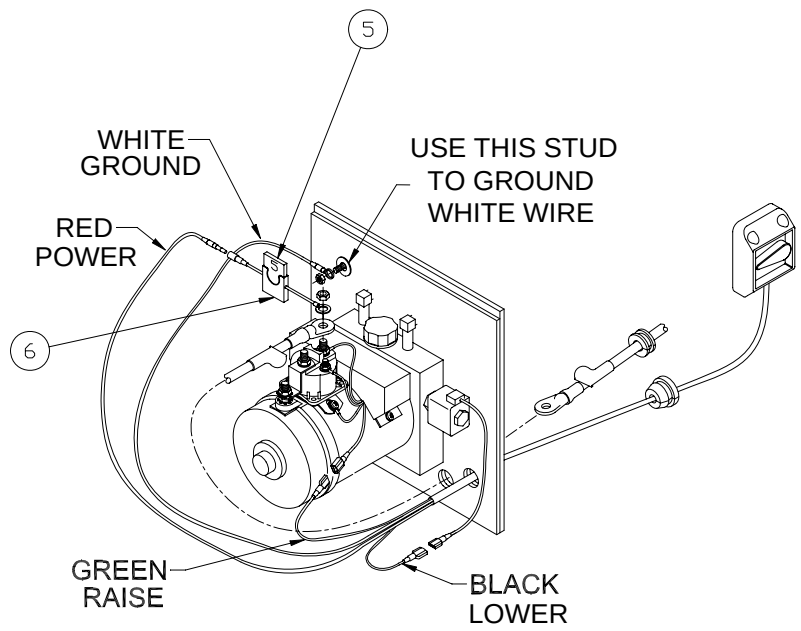

Thermalpak® with Voltage Guard™

WALTCO
TRUCK EQUIPMENT CO.

REVISED: 5-7-04
E.O. 5337G
REV. 03

PM-617

ITEM	PART NUMBER	QTY	DESCRIPTION
1	10099322 [a]	1	SuperSwitch™ (for curb side)
	10099323 [b]	1	SuperSwitch™ (for Dual Control Harness)
2	10099325 [c]	1	SuperSwitch™ (Hand Held Remote)
3	75082038	1	Trailer Socket
4	75082037	1	Trailer Plug
5	75089853	1	5 Amp Fuse
6	75089850	1	Fuse Holder

[a] Included in SuperSwitch™ Kit 80000428.

[b] Included in SuperSwitch™ Dual Control Kit 80000434.

[c] Included in SuperSwitch™ Hand Held Remote Kit 80000430.

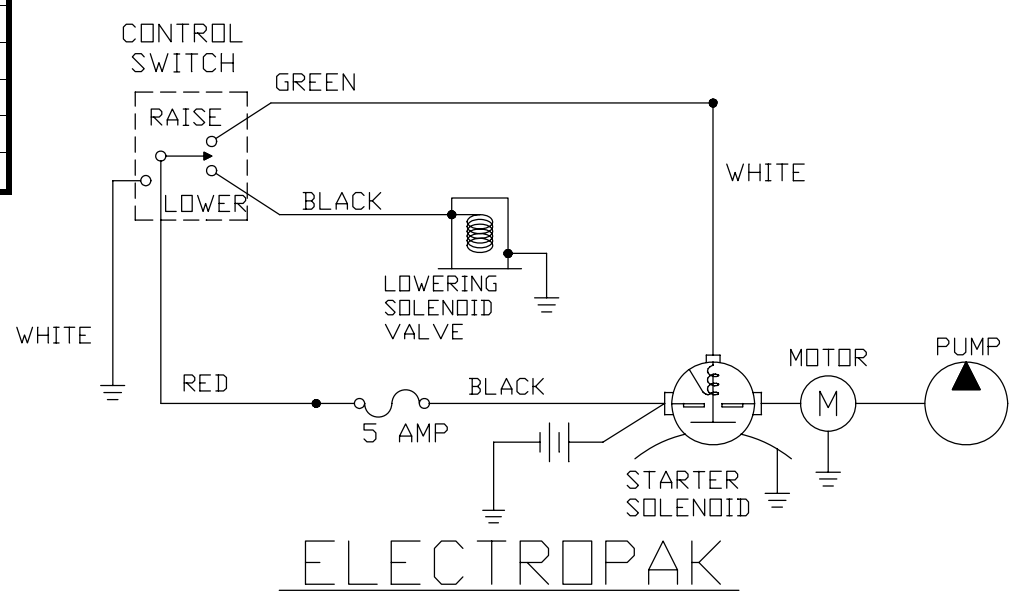

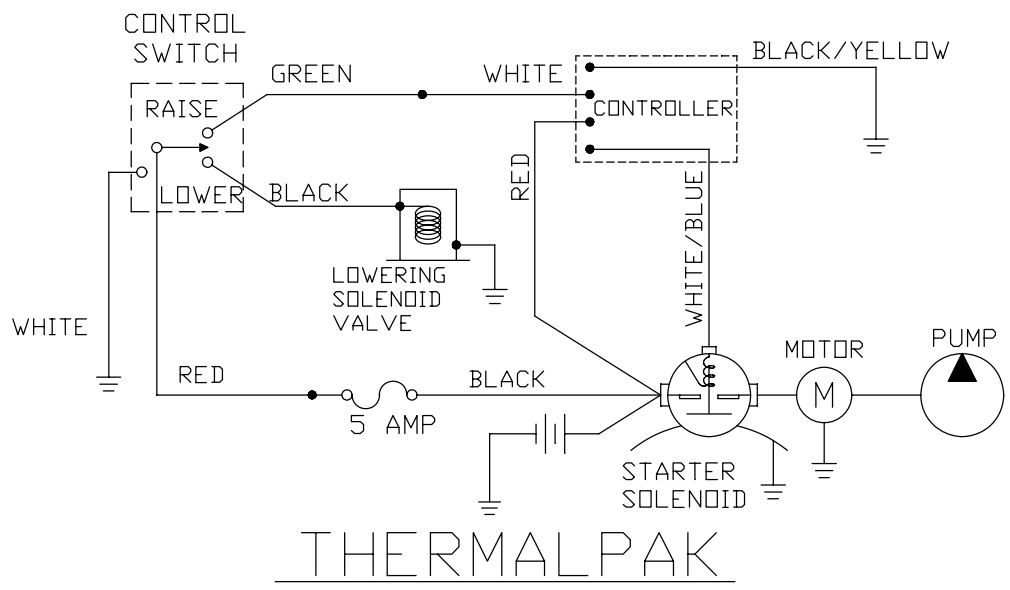

© 2009 Waltco Lift Corp. All rights reserved

ELECTRIC CONTROL OPTIONS – Gravity Down
(Built from 7-08 thru 8-09)

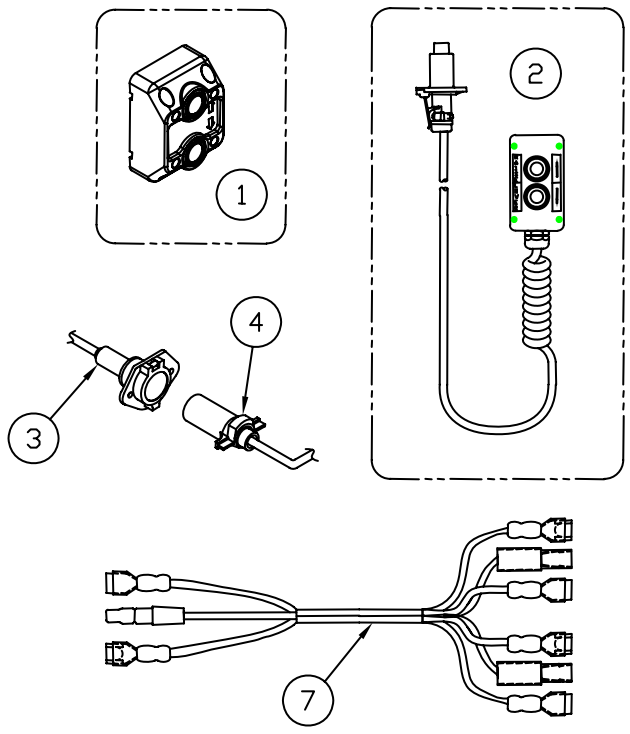

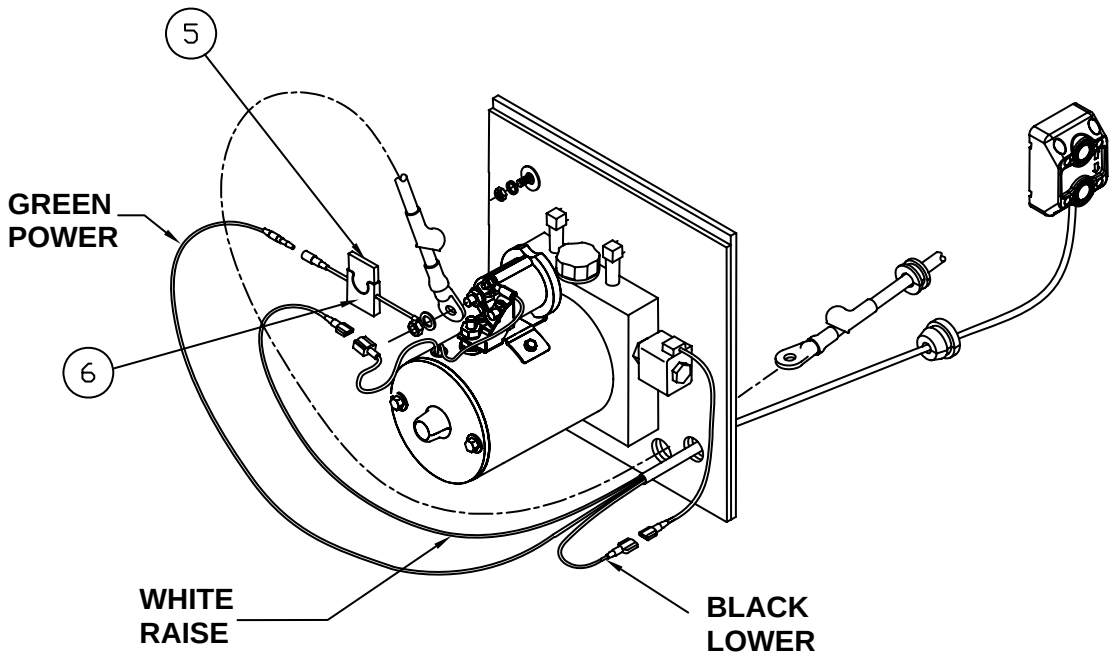

WALTCO LIFT CORP.

REVISED: 7-1-08
E.O. 6046
REV. 01

PM-617A

	PART NUMBER	QTY	DESCRIPTION
1	10099322 [a]	1	Switch w/10ft Cord (for curb side)
	10099323 [b]	1	Switch w/15ft Cord (for Dual Control)
2	10099325 [c]	1	Switch (Hand Held Remote)
3	75082038	1	Trailer Socket
4	75082037	1	Trailer Plug
5	75089851	1	10 Amp Fuse
6	75089850	1	Fuse Holder
7	10098413	1	Dual Control Harness

[a] Included in Switch Kit 80000428.
[b] Included in Switch Dual Control Kit 80000434.
[c] Included in Switch Hand Held Remote Kit 80000430.

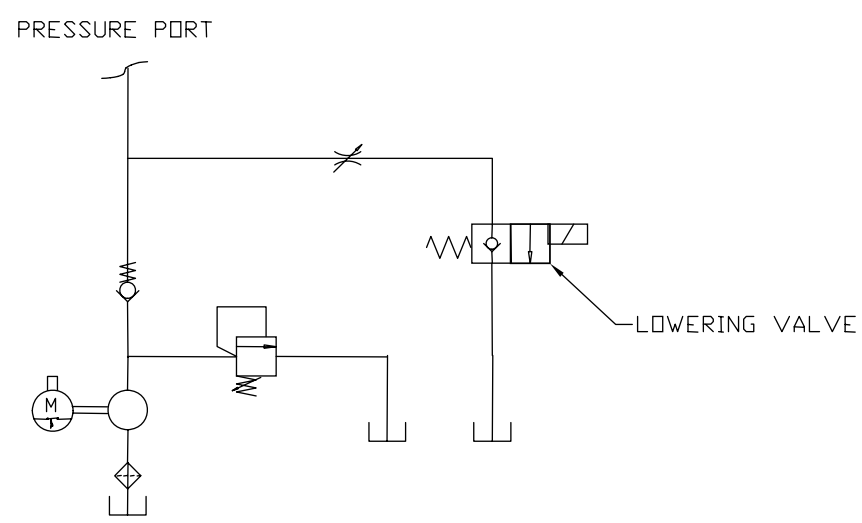

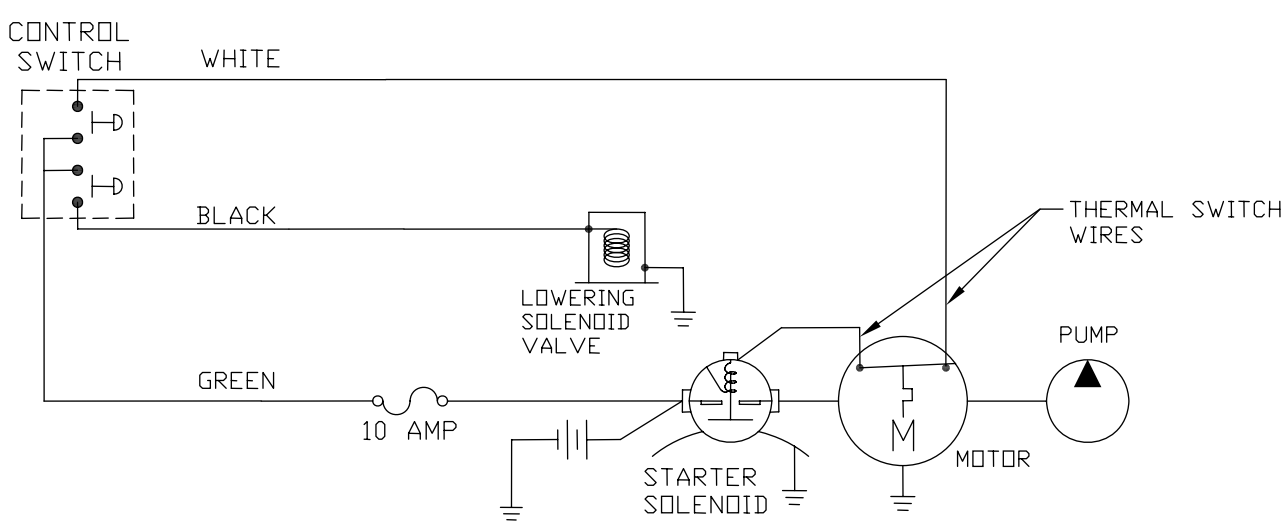

© 2009 Waltco Lift Corp. All rights reserved

ELECTRIC CONTROL OPTIONS – GRAVITY DOWN
(Built from 8-09)

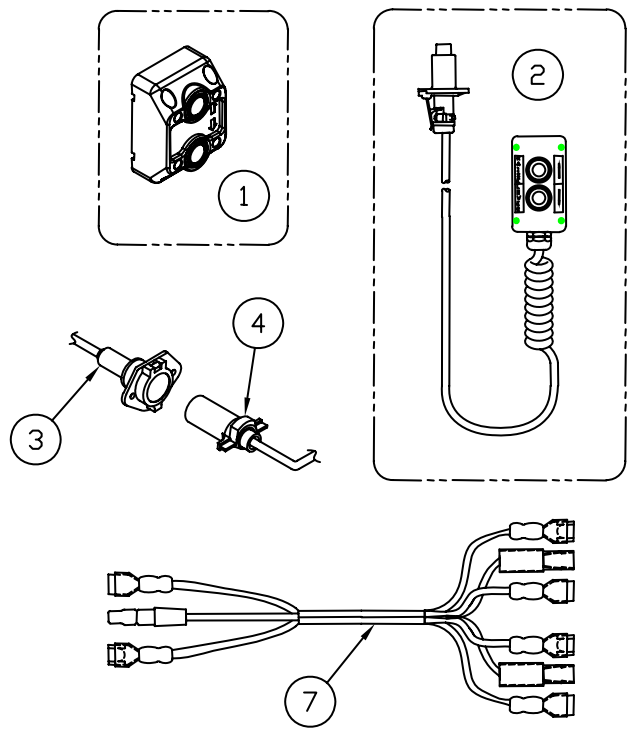

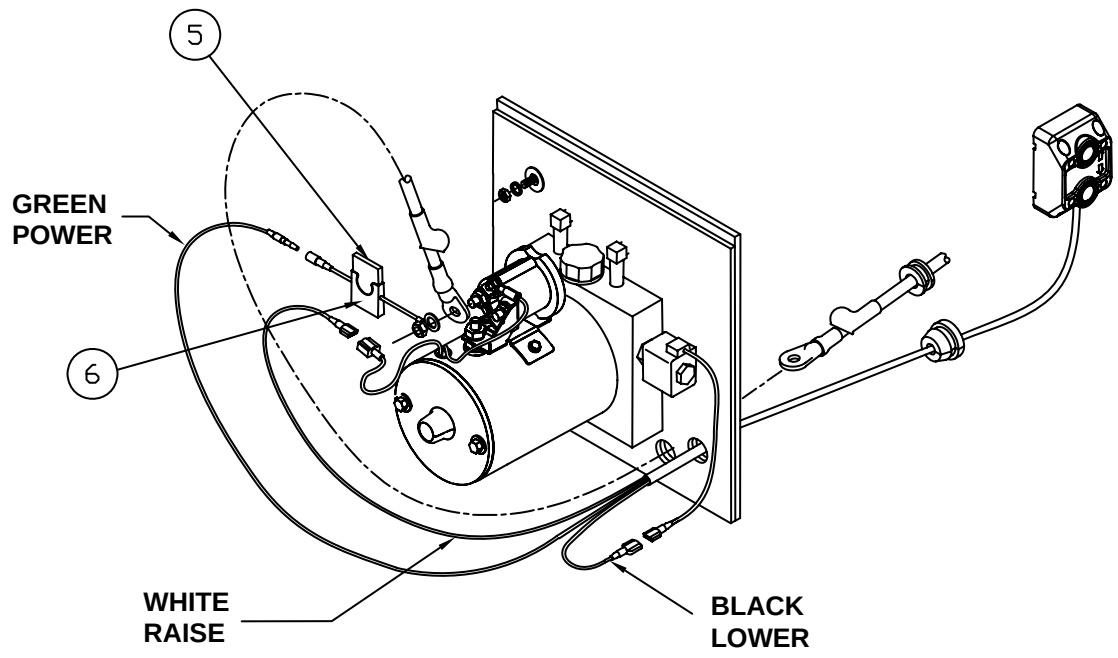

WALTCO LIFT CORP.

REVISED: 12-17-09
E.O. 6339
REV. 02

PM-617B

	PART NUMBER	QTY	DESCRIPTION
1	10099322 [a]	1	Switch w/10ft Cord (for curb side)
	10099323 [b]	1	Switch w/15ft Cord (for Dual Control)
2	10099325 [c]	1	Switch (Hand Held Remote)
3	75082038	1	Trailer Socket
4	75082037	1	Trailer Plug
5	75089854	1	15 Amp Fuse
6	75089850	1	Fuse Holder
7	10098413	1	Dual Control Harness

[a] Included in Switch Kit 80000428.
[b] Included in Switch Dual Control Kit 80000434.
[c] Included in Switch Hand Held Remote Kit 80000430.

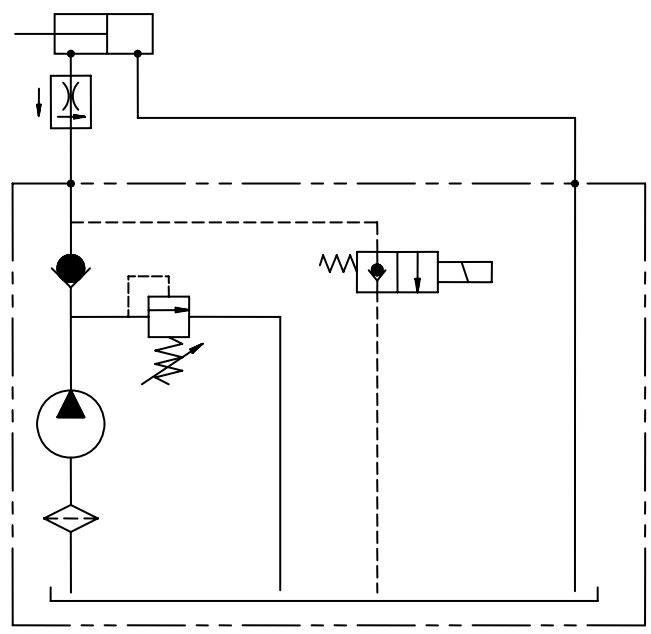

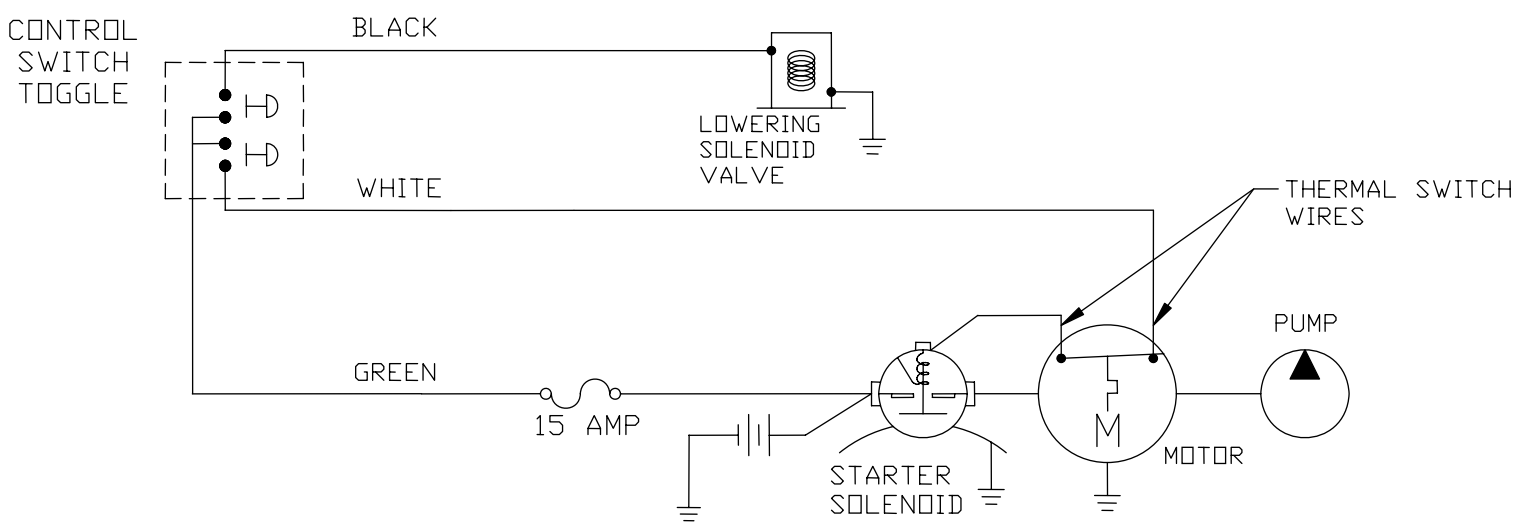

© 2009 Waltco Lift Corp. All rights reserved

K & K RM-SERIES PUMPS & CYLINDER Parts Drawings

If unsure of the correct pump or cylinder part number, click here.

QUICK TIP:

Most pumps have a pump pressure decal on them that also includes the pump part number. This number will always be an 8-digit part number. If still unsure, please contact Waltco for assistance.

CYLINDERS

Part Number	Description	PM No.
22180050	Lift Cylinder	**PM-210**
22280050	Lift Cylinder	**PM-209**
22180010	Lift Cylinder	**PM-470**
22280010	Lift Cylinder	**PM-471**

HYDRAULIC PUMPS

Part Number	Description	Pump Mfr.	PM No.
22195000	Hydraulic Pump Assembly	Fenner	**PM-110B**
70400300	Hydraulic Pump Assembly	Monarch	**PM-398**
30195000	Hydraulic Pump Assembly	Fenner	**PM-111B**
70400125	Hydraulic Pump Assembly	Monarch	**PM-643**
70402100	Hydraulic Pump Assembly	Monarch	**PM-645**
70402125	Hydraulic Pump Assembly	Monarch	**PM-645**

© 2009 Waltco Lift Corp. All rights reserved

SOLENOID OPERATED PUMP UNIT
(Built thru 2-94)

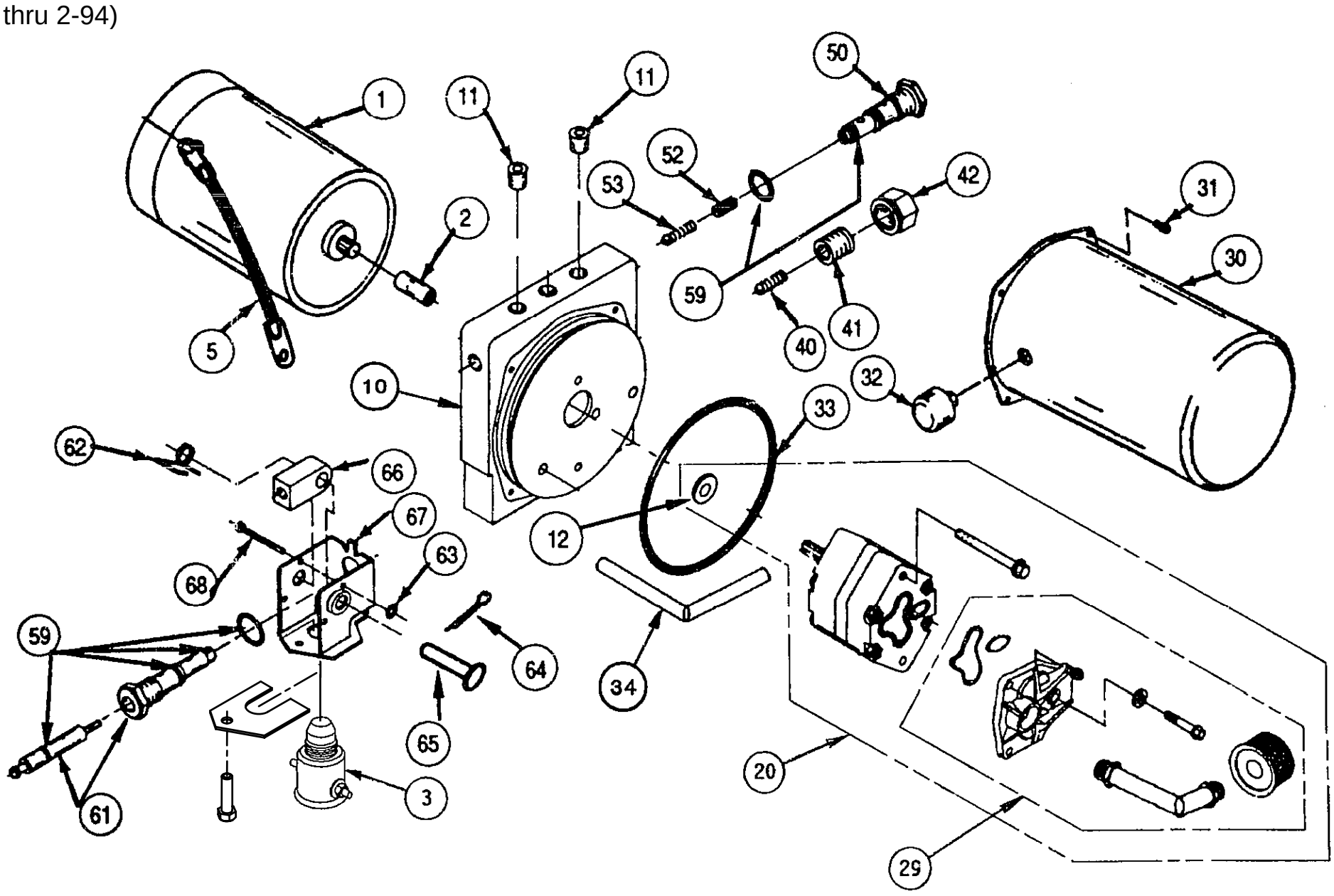

WALTCO
TRUCK EQUIPMENT CO.
22195000

REVISED: 8-1-09
E.O. 6251
REV. 05

PM-110B

ITEM	PART NUMBER	QTY	DESCRIPTION
1	U25163	1	Motor
2	70091618	1	Coupling
3	80000692	1	Switch Kit
5	70091260	1	Terminal Cable Assembly
10	70091274	1	End Head
11	70091291	2	Plug
12	70091629	1	Shaft Seal
20	70091615	1	Pump Assembly Kit
29	70091758	1	Suction Cover Kit
30	70091262	1	Reservoir
31	70091265	4	Screw
32	70091270	1	Breather Cap
33	75000027	1	“O” Ring
34	70091493	1	Return Tube
40	70091249	1	Ball
	70091250	1	Spring
41	70091295	1	Adjustment Screw
42	70091294	1	Relief Cap Assembly
50	70091395	1	Check Cap Assembly
52	70091296	1	Spring Retainer
53	70091281	1	Spring & Ball Assembly
59			Valve Seal Kit
	75000025	1	“O” Ring
	75000026	2	“O” Ring
	75000036	2	“O” Ring
	70091297	2	Seal Ring
61	80000722	1	Release Cap Stem Assembly
62	70160009*	1	Spring
63	70091602*	1	Grip Ring
64	70091604*	1	Cotter Pin
65	70091603	1	Headed Pin
66	70091266*	1	Cam
67	70091277*	1	Mounting Bracket Assembly
68	70091601*	1	Headed Pin

* Items included in switch kit 70091279

© 2009 Waltco Lift Corp. All rights reserved

70400225, 70400300, 70400500 Monarch Pump
(Service pump for 22195000)

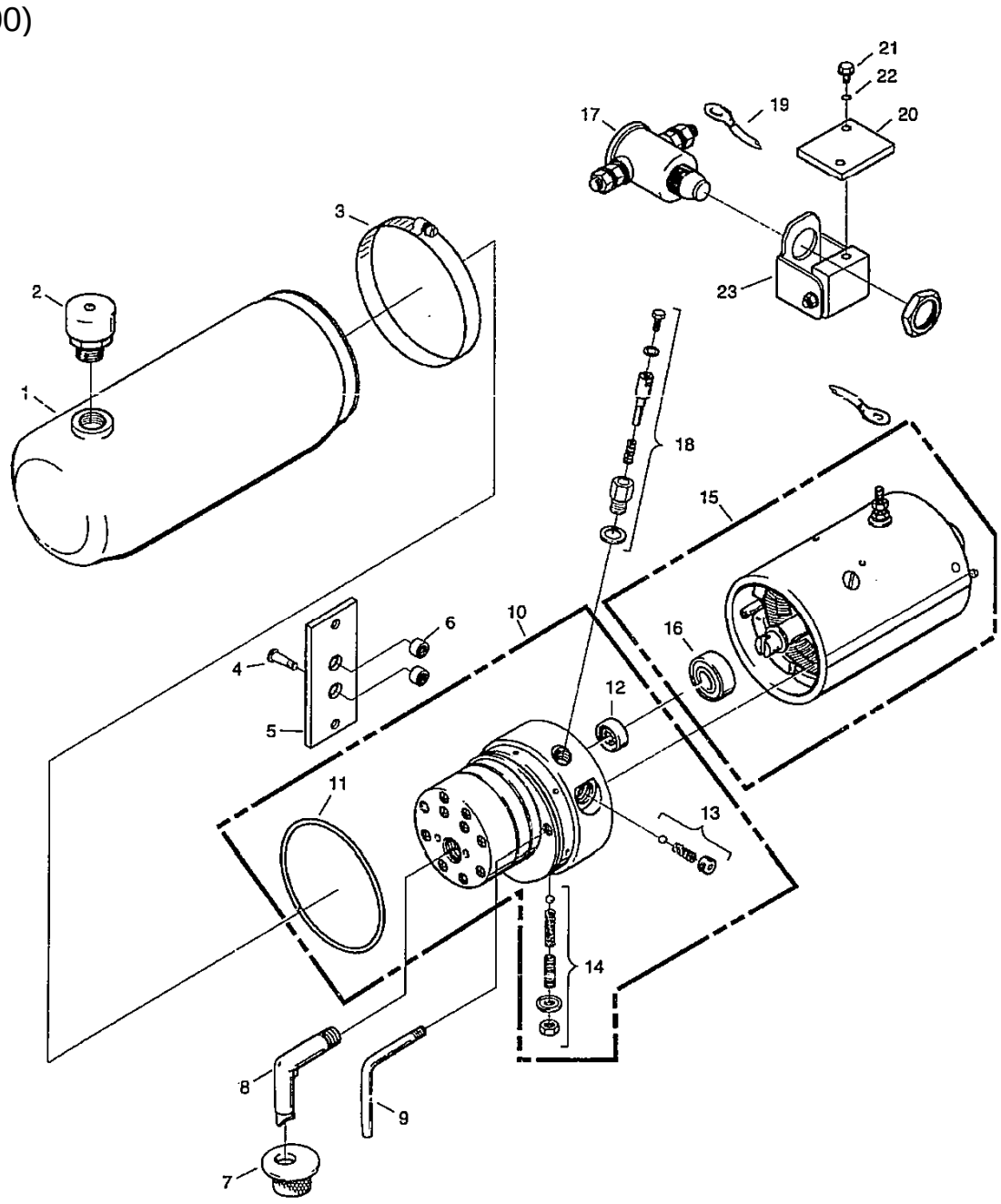

WALTCO
TRUCK EQUIPMENT CO.
70400225, 70400300, 70400500

REVISED: 8-1-09
E.O. 6251
REV. 02

PM-398

ITEM	PART NUMBER	QTY	DESCRIPTION
1	70400001	1	Reservoir, Plastic, 4.5” x 13”
2	70400004	1	Plug, vent, 3/8” NPT
3	70400002	1	Clamp, Hose Worm Gear (M-Series)
4	70400482	2	Screw, Flat Head Cap, 3/8”-16 x 1-1/4”
5	70400481	1	Bracket, Plate Mount
6	70091728	2	Spacer
7	70091730	1	Screen, Filter (Suction)
8	70091731	1	Tube, Filter Suction, 3/8” NPT 90°
9	70092328	1	Tube, Return 90°
10	70400478	1	Pump Assembly, Gear Code 03
11	70091717	1	“O” Ring
12	70400006	1	Seal
13	70091718	1	Parts Kit, Ball Check
14	70092355	1	Parts Kit, Relief Valve
15	7043001-1	1	Motor, Electric 12 VDC
16	70091721	1	Bearing, Base Motor
17	70092304	1	Switch
18	70092307	1	Parts Kit, Plunger
19	70092402	1	Cable with Lugs
20	70400479	1	Adapter
21	70400483	1	Screw
22	70400484	1	Washer
23	70400480	1	Bracket Assembly

© 2009 Waltco Lift Corp. All rights reserved

SOLENOID OPERATED PUMP UNIT
(Built thru 2-94)

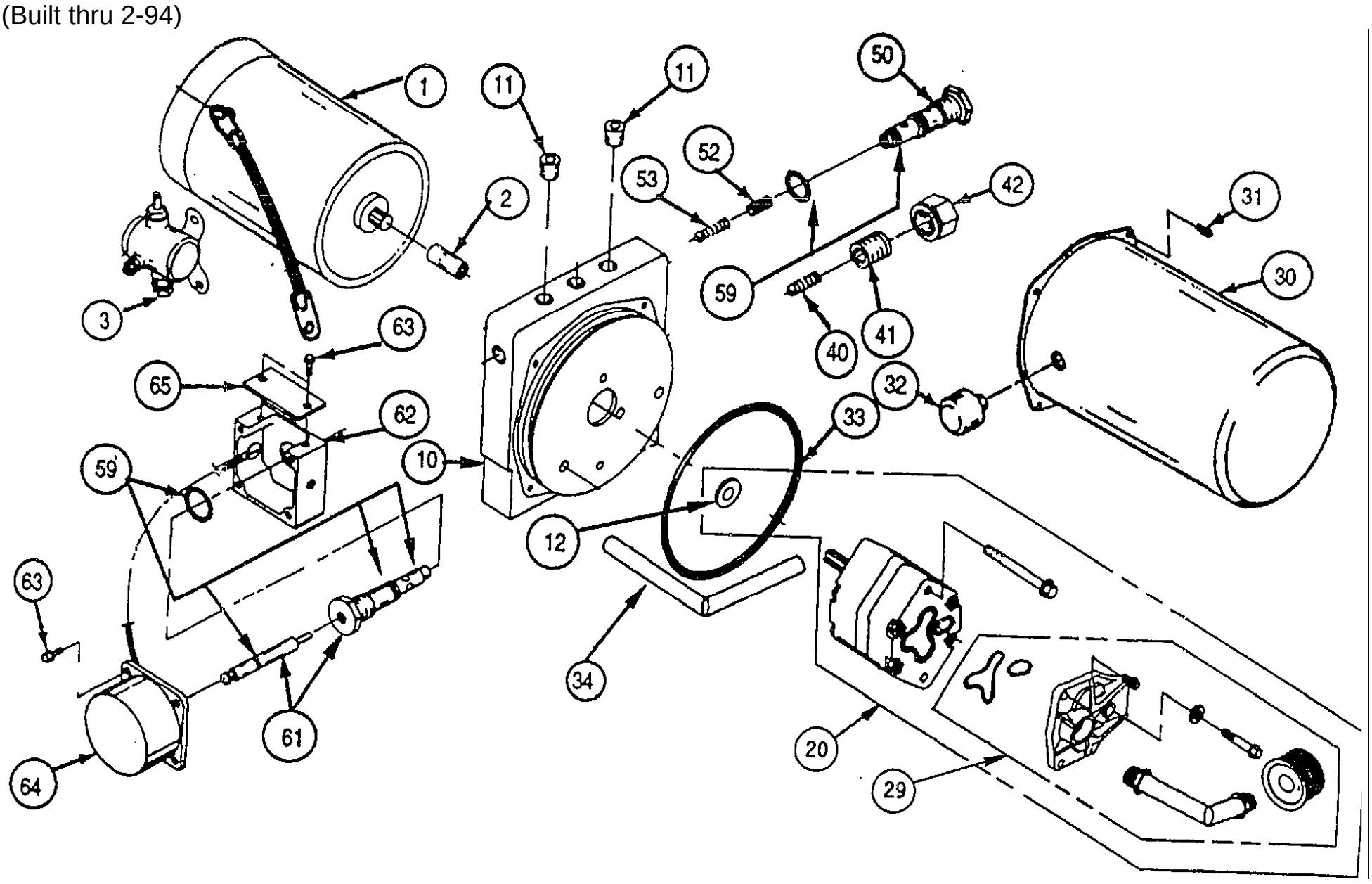

WALTCO
TRUCK EQUIPMENT CO.
30195000, 33095001,
33595001

REVISED: 8-1-09
E.O. 6251
REV. 06

PM-111B

ITEM	PART NUMBER	QTY	DESCRIPTION
1	U25163	1	Motor
2	70091618	1	Coupling
3	80001065	1	Solenoid Kit
10	70091274	1	End Head
11	70091291	2	Plug
12	70091629	1	Shaft Seal
20	70091615	1	Pump Assembly Kit
29	70091758	1	Suction Cover Kit
30	70091262	1	Reservoir
31	70091265	4	Screw
32	70091270	1	Breather Cap
33	75000027	1	“O” Ring
34	70091493	1	Return Tube
40	70091249	1	Ball
	70091250	1	Spring
41	70091295	1	Check Cap Assembly
42	70091294	1	Relief Cap Assembly
50	70091395	1	Check Cap Assembly
52	70091696	1	Spring Retainer
53	70091281	1	Spring & Ball Assembly
59			Valve Seal Kit
	75000025	1	“O” Ring
	75000026	2	“O” Ring
	75000036	2	“O” Ring
	70091297*	2	Seal Ring
61	80000722	1	Release Cap Stem Assembly Kit
62	70091358*	1	Solenoid Bracket
63	70091352*	6	Screw
64	70091631	1	Solenoid
65	70091353*	1	Cover

* Items included in switch kit 70091679

© 2009 Waltco Lift Corp. All rights reserved

70400125 SOLENOID OPERATED
(Built 2-94 thru 7-04)

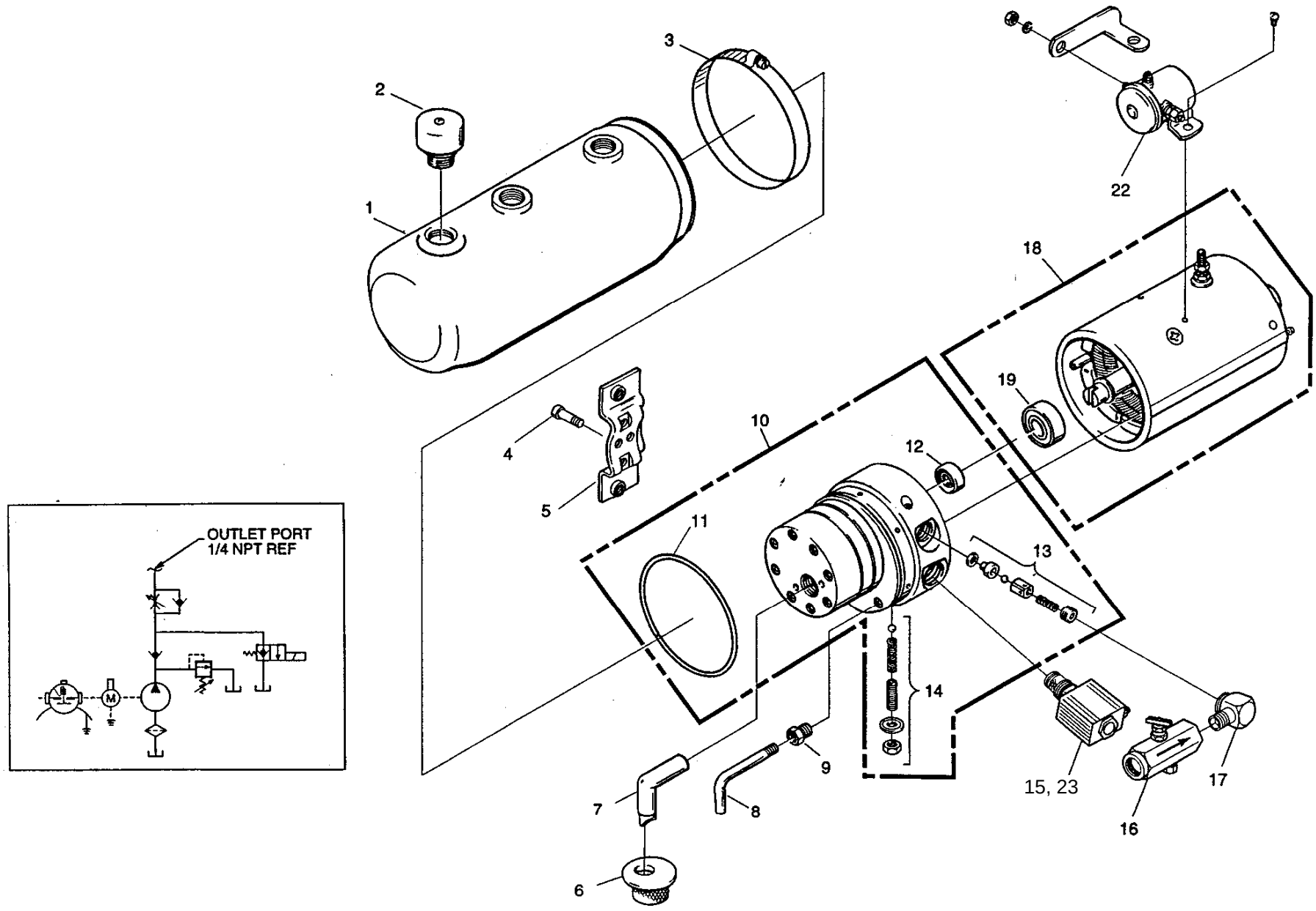

WALTCO
TRUCK EQUIPMENT CO.
70400125

REVISED: 8-1-09
E.O. 6251
REV. 03

PM-643

ITEM	PART NUMBER	QTY	DESCRIPTION
1	70400001	1	Reservoir, Plastic
2	70400004	1	Breather
3	70400002	1	Clamp
4	70092357	2	Screw
5	70400008	1	Bracket
6	70091730	1	Screen
7	70091731	1	Tube
8	70091732	1	Tube
9	70092504	1	Bushing
10	70400005	1	Pump Assembly Kit (includes items 11-14)
11	70091717	1	“O” Ring
12	70400006	1	Seal
13	70400007	1	Valve Assembly
14	70092355	1	Relief Valve Assembly
15	70092503	1	Valve Assembly, 2-way, 2 position w/ Coil
16	70189860	1	Valve
17	75082611	1	Elbow
18	7043001-1	1	Motor Kit (includes item 19)
19	70091721	1	Bearing
22	80001065	1	Solenoid Kit
23	70402303	1	Coil, 10V, 25A

© 2009 Waltco Lift Corp. All rights reserved

70402100, 70402125 GRAVITY DOWN THERMALPAK® WITH VOLTAGE GUARD
(Built from 7-04)

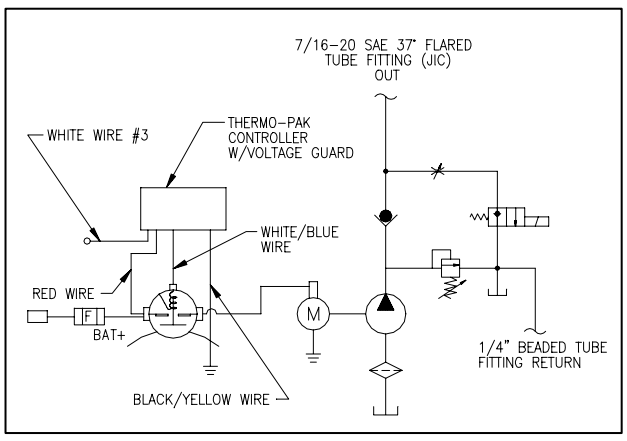

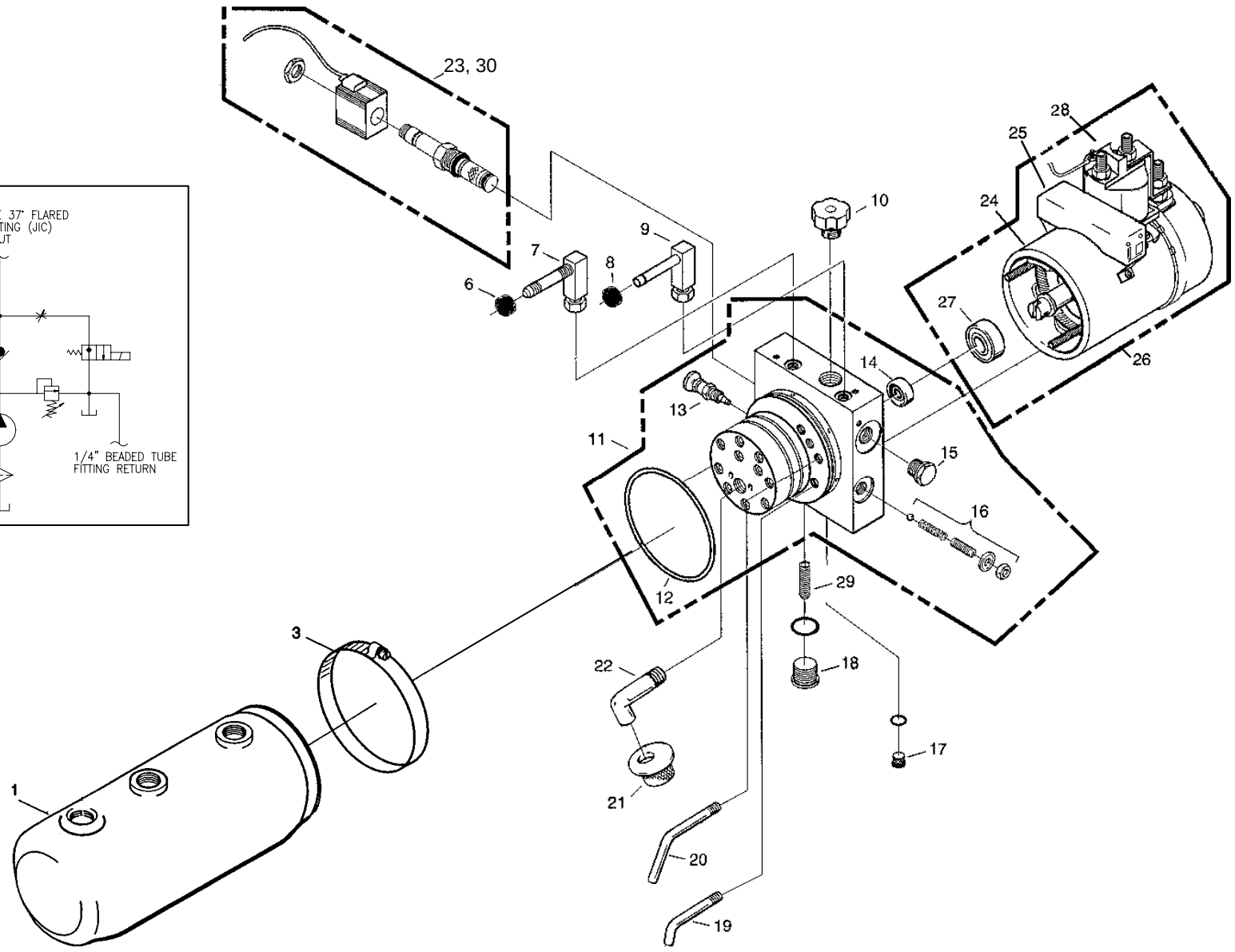

WALTCO
TRUCK EQUIPMENT CO.
KRM Series

REVISED: 8-1-09
E.O. 6251
REV. 04

PM-645

ITEM	PART NUMBER	QTY	DESCRIPTION
1	70400001	1	Reservoir (Plastic)
3	70400002	1	Clamp
6	70401408	1	Grommet
7	70401435	1	Fitting, male 7/16” SAE 37° Flare
8	70401409	1	Grommet
9	70401430	1	Fitting, barbed
10	70091734	1	Breather
11	70401410	1	Pump Assembly
12	70091717	1	O-ring
13	70401711	1	Flow Control Valve
14	70400006	1	Seal
15	70401412	1	Sight Glass
16	70401413	1	Relief Valve
17	70401415	1	Drain Plug
18	70401414	1	Plug, Check valve
19	70401406	1	Return Tube
20	70401405	1	Return Tube
21	70091730	1	Filter
22	70091731	1	Suction Tube
23	70092503	1	Valve Assembly, 2-way, 2 position w/ Coil
24	7043001-1	1	Motor
25	10099300	1	Thermalpak® with Voltage Guard™
26	70400854	1	Motor/Solenoid/Controller
27	70091721	1	Bearing
28	75089833	1	Starter Solenoid
29	70401416	1	Check Valve
30	70402303	1	Coil, 10V, 25A

© 2009 Waltco Lift Corp. All rights reserved

22180050
(Built thru 5-03)

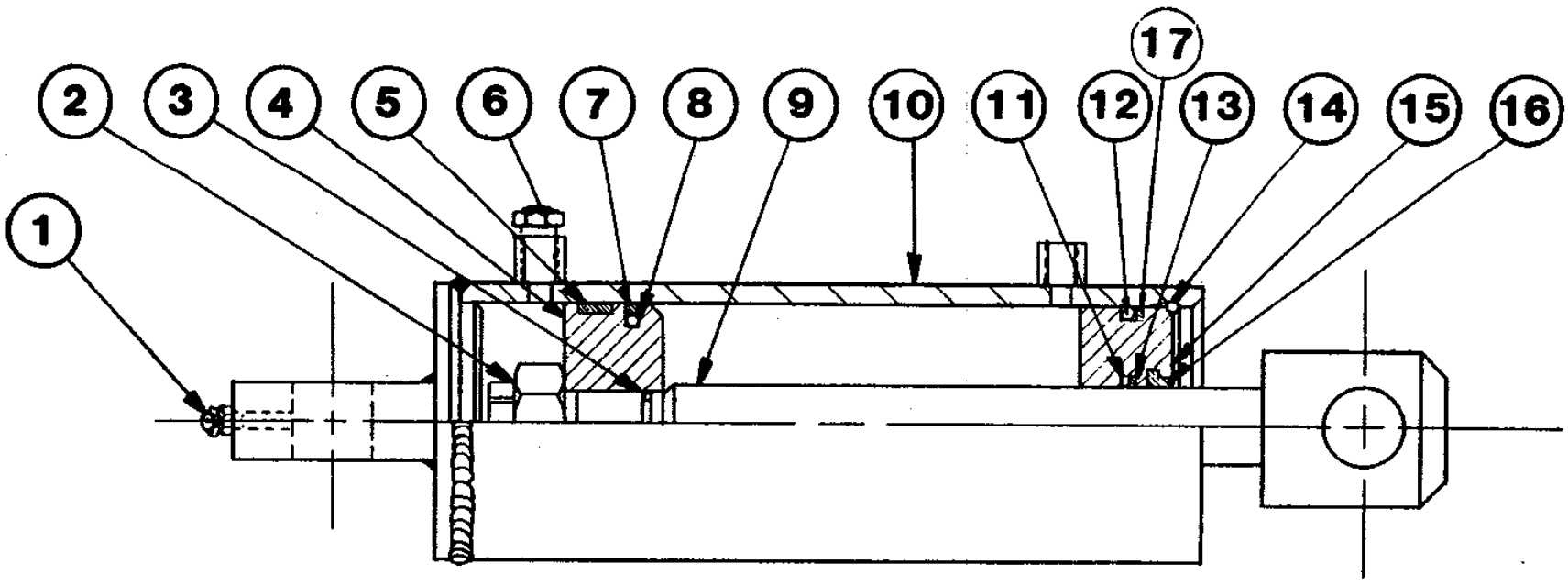

SPECIFICATIONS

RETRACTED 15.50
EXTENDED 22.50
BARREL O.D. 3.88

WALTCO
TRUCK EQUIPMENT CO.
22180050

REVISED: 1-89

PM-210

ITEM	PART NUMBER	QTY	DESCRIPTION
1	75089305	1	Grease Fitting 65°
2	75085190	1	Locknut
3	75000033*	1	"O" Ring
4	22181550	1	Piston
5	70270506*	1	Wear Ring
6	75089315	1	Breather
7	70270613*	1	Seal Ring
8	75000047*	1	"O" Ring
9	22181050	1	Shaft Assembly
10	22182050	1	Barrel Assembly
11	75000022*	1	"O" Ring
12	75000032*	1	"O" Ring
13	75000504*	1	Backup Ring
14	22182950	1	Retaining Ring
15	22180250	1	Nose Bearing
16	70270459*	1	Rod Wiper
17	75000508*	1	Backup Ring
18	22180095	1	Repair Kit

* Indicates Parts Included in Repair Kit.

Note: Refer to Cylinder Serial Number located on the Cylinder Barrel when ordering Parts.

© 2009 Waltco Lift Corp. All rights reserved

22280050
(Built thru 5-03)

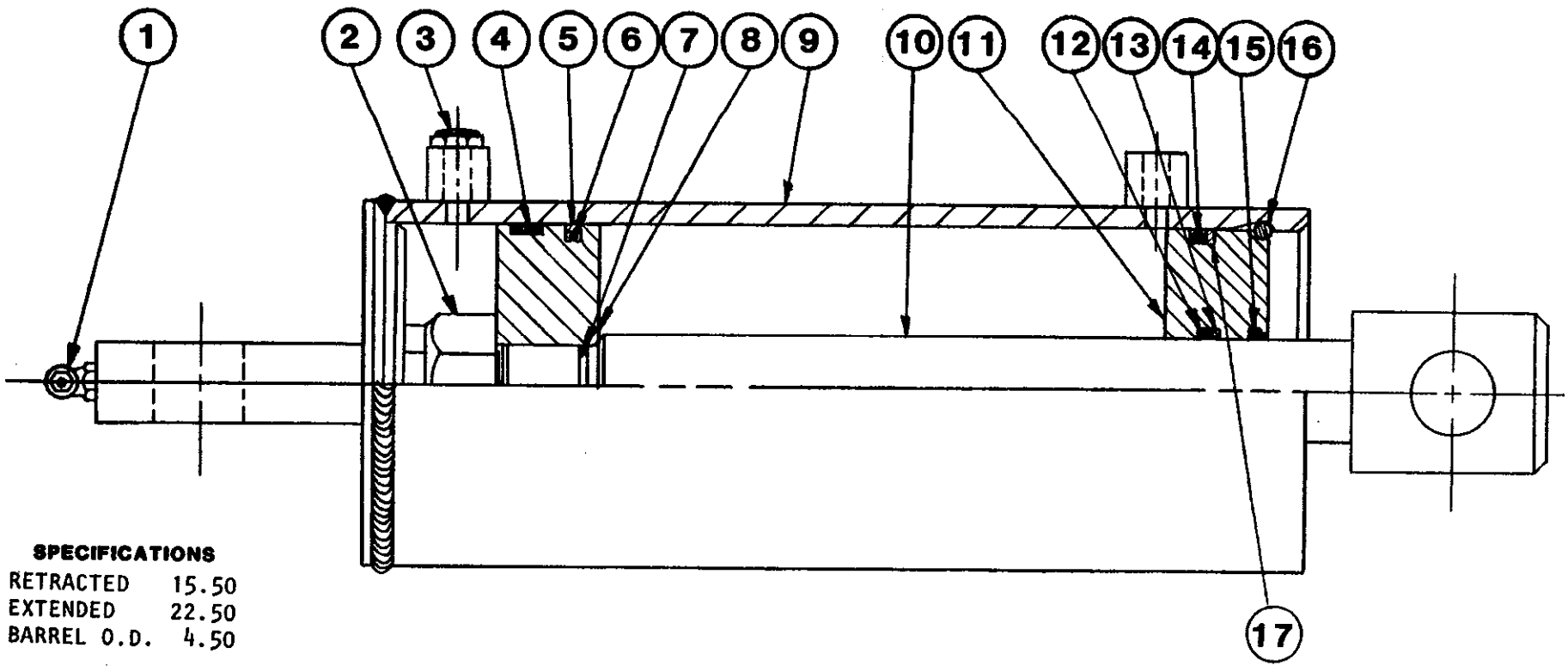

WALTCO
TRUCK EQUIPMENT CO.
22280050

REVISED: 1-89

PM-209

ITEM	PART NUMBER	QTY	DESCRIPTION
1	75089305	1	Grease Fitting 65°
2	75085190	1	Locknut
3	75089315	1	Breather
4	70270502*	1	Wear Ring
5	70270620*	1	Seal Ring
6	75000043*	1	"O" Ring
7	75000033*	1	"O" Ring
8	22281550	1	Piston
9	22282050	1	Barrel Assembly
10	22281050	1	Shaft Assembly
11	22280250	1	Nose Bearing
12	75000022*	1	"O" Ring
13	75000504*	1	Backup Ring
14	75000009*	1	"O" Ring
15	70270459*	1	Rod Wiper
16	22282950	1	Retaining Ring
17	75000509*	1	Backup Ring
18	22280095	1	Repair Kit

* Indicates Parts Included in Repair Kit.

Note: Refer to Cylinder Serial Number located on the Cylinder Barrel when ordering Parts.

© 2009 Waltco Lift Corp. All rights reserved

22180010
(Built from 5-03)

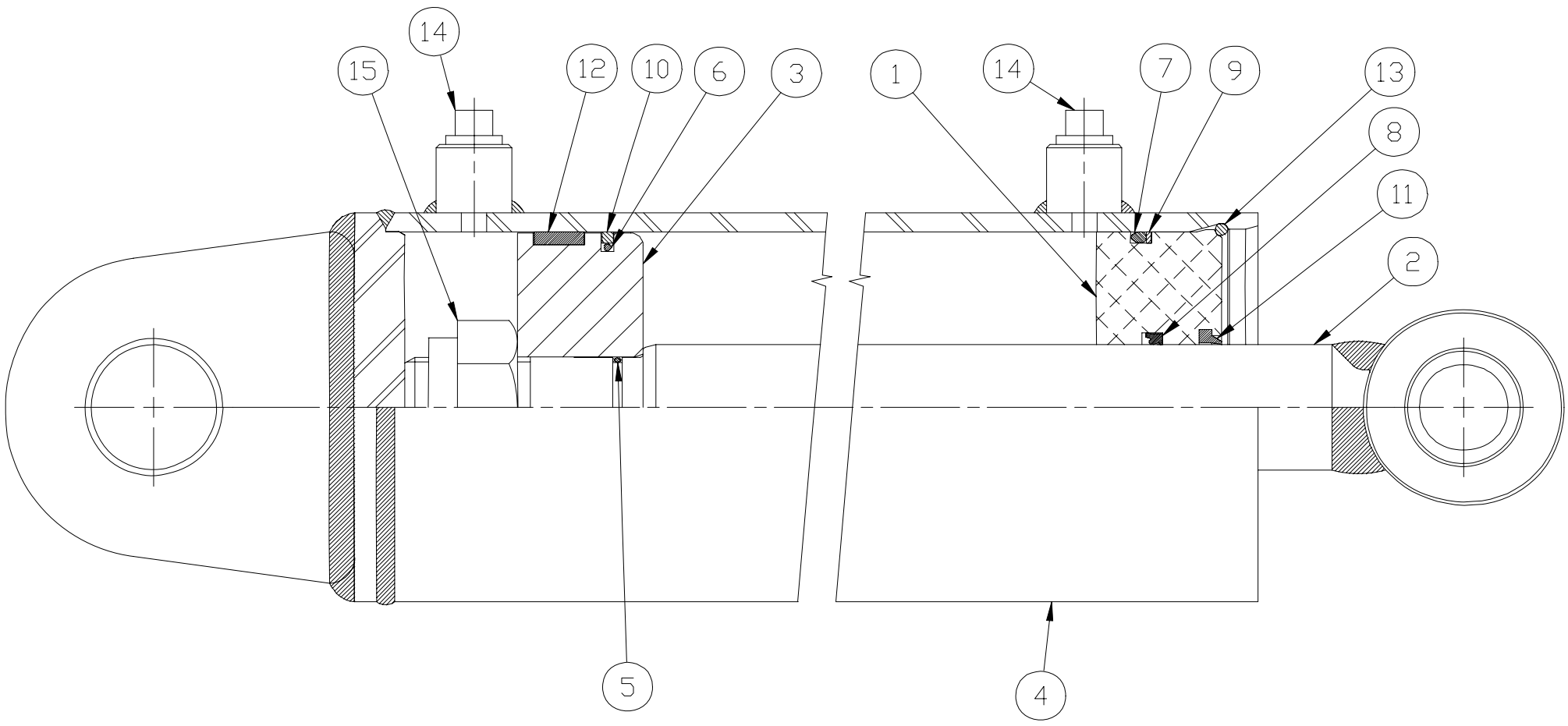

WALTCO
TRUCK EQUIPMENT CO.
22180010

REVISED: 4-1-05
E.O. 5221G
REV. 02

PM-470

ITEM	PART NUMBER	QTY	DESCRIPTION
1	11221-0200	1	Gland
2	11400-1000	1	Rod Assembly
3	11402-1500	1	Piston
4	11402-2000	1	Barrel Assembly
5	----------*	1	“O” Ring
6	----------*	1	“O” Ring
7	----------*	1	“O” Ring
8	----------*	1	Rod Seal
9	----------*	1	Backup Ring
10	----------*	1	Piston Seal
11	----------*	1	Rod Wiper
12	----------*	1	Wear ring
13	4052	1	Retaining Ring
14	4179	2	Caplug
15	4406	1	Locknut

* Indicates parts included in repair kit number 22180096.

NOTE: Refer to cylinder serial number located on the cylinder barrel when ordering parts.

Example: 11402-XXXXX

© 2009 Waltco Lift Corp. All rights reserved

22280010
(Built from 5-03)

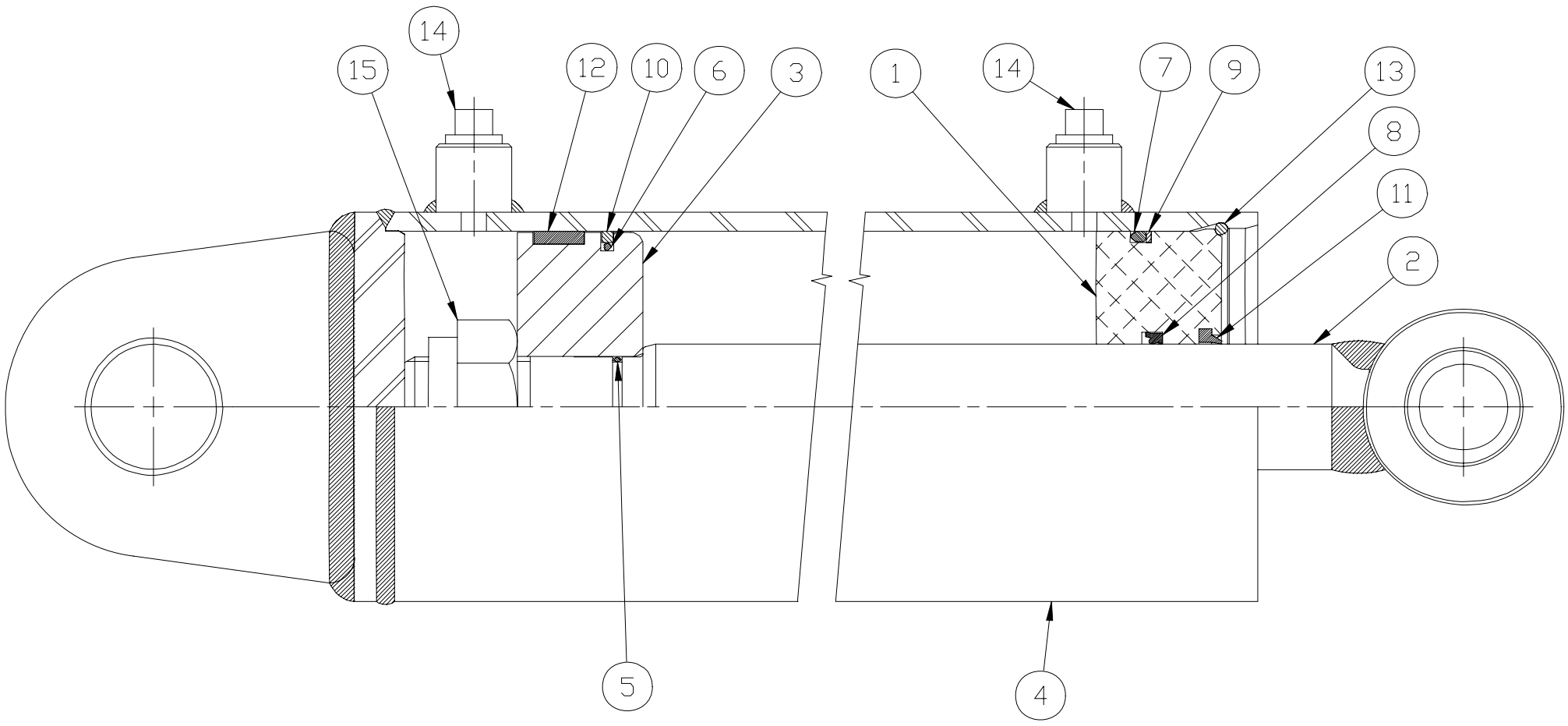

WALTCO
TRUCK EQUIPMENT CO.
22280010

REVISED: 4-1-05
E.O. 5221G
REV. 02

PM-471

ITEM	PART NUMBER	QTY	DESCRIPTION
1	11222-0200	1	Gland
2	11400-1000	1	Rod Assembly
3	11400-1500	1	Piston
4	11400-2000	1	Barrel Assembly
5	----------*	1	“O” Ring
6	----------*	1	“O” Ring
7	----------*	1	“O” Ring
8	----------*	1	Rod Seal
9	----------*	1	Backup Ring
10	----------*	1	Piston Seal
11	----------*	1	Rod Wiper
12	----------*	1	Wear ring
13	4050	1	Retaining Ring
14	4179	2	Caplug
15	4406	1	Locknut

* Indicates parts included in repair kit number 22280096.

NOTE: Refer to cylinder serial number located on the cylinder barrel when ordering parts.

Example: 11400-XXXXX

© 2009 Waltco Lift Corp. All rights reserved

WALTCO approximate serial number dates.

Tallmadge

Revised 12-14-10

Ser No	Date
220000	11/88
221000	12/88
222000	01/89
223000	03/89
224000	04/89
225000	05/89
226000	06/89
227000	08/89
228000	10/89
229000	11/89
240000	01/90
241000	02/90
242000	07/90
243000	04/90
244000	05/90
245000	07/90
246000	09/90
247000	12/90
248000	12/90
249000	02/91
260000	04/91
261000	05/91
262000	08/91
263000	10/91
264000	12/91
265000	02/92
266000	03/92
267000	05/92
268000	06/92
269000	08/92
280000	09/92
281000	11/92
282000	12/92
283000	02/93
284000	03/93
285000	04/93
286000	06/93
287000	07/93
288000	08/93
289000	10/93
300000	11/93
301000	02/94
302000	02/94
303000	03/94
304000	04/94
305000	05/94
306000	08/94
307000	09/94
308000	10/94
309000	10/94
320000	12/94
321000	01/95

Ser No	Date
322000	03/95
323000	04/95
324000	06/95
325000	07/95
326000	09/95
327000	09/95
328000	11/95
329000	01/96
340000	02/96
341000	03/96
342000	04/96
343000	05/96
344000	07/96
345000	08/96
346000	10/96
347000	12/96
348000	03/97
349000	03/97
360000	04/97
361000	05/97
362000	06/97
363000	07/97
364000	08/97
365000	10/97
366000	11/97
367000	12/97
368000	01/98
369000	06/98
380000	03/98
381000	06/98
382000	06/98
383000	08/98
384000	08/98
385000	11/98
386000	12/98
387000	12/98
388000	01/99
389000	04/99
400000	02/99
401000	03/99
402000	05/99
403000	05/99
404000	06/99
405000	08/99
406000	08/99
407000	10/99
408000	11/99
409000	11/99
420000	12/99
421000	12/99
422000	04/00
423000	03/00

Ser No	Date
424000	03/00
425000	04/00
426000	05/00
427000	07/00
428000	08/00
429000	08/00
440000	09/00
441000	11/00
442000	12/00
443000	02/01
444000	04/01
445000	05/01
446000	09/01
447000	09/01
448000	11/01
449000	01/02
460000	04/00
461000	05/02
462000	06/02
463000	09/02
464000	10/02
465000	12/02
466000	01/03
467000	02/03
468000	05/03
469000	05/03
480000	07/03
481000	08/03
482000	10/03
483000	11/03
484000	01/04
485000	02/04
486000	02/04
487000	03/04
488000	03/04
489000	05/04
500000	05/04
501000	06/04
502000	06/04
503000	07/04
504000	09/04
505000	10/04
506000	12/04
507000	01/05
508000	02/05
509000	02/05
520000	03/05
521000	03/05
522000	03/05
523000	04/05
524000	04/05
524500	05/05

Ser No	Date
526000	06/05
527000	07/05
528000	07/05
529000	09/05
540000	09/05
541000	10/05
542000	11/05
543000	11/05
544000	12/05
545000	02/06
546000	03/06
547000	03/06
548000	03/06
549000	04/06
560000	05/06
561000	06/06
562000	06/06
563000	06/06
564000	06/06
565000	07/06
566000	08/06
567000	09/06
568000	10/06
569000	11/06
580000	01/07
581000	01/07
582000	02/07
583000	03/07
584000	05/07
585000	06/07
586000	07/07
587000	10/07
588000	11/07
589000	01/08
600000	02/08
601000	05/08
602000	07/08
603000	09/08
604000	01/09
605000	04/09
606000	07/09
607000	08/09
608000	10/09
609000	11/09
610000	12/09
611000	01/10
612000	03/10
613000	05/10
614000	06/10
615000	08/10
616000	09/10
617000	10/10

Ser No	Date
618000	11/10
619000	12/10

***All Serial Number Dates are approximate**

© 2009 Waltco Lift Corp. All rights reserved

Gardena

Ser No	Date
116000	01/83
117000	05/83
118000	09/83
119000	12/83
130000	03/84
131000	05/84
132000	07/84
133000	10/84
134000	12/84
135000	03/85
136000	04/85
137000	07/85
138000	10/85
139000	11/85
150000	03/86
151000	05/86
152000	09/86
153000	12/86
154000	03/87
155000	05/87
156000	07/87
157000	10/87
158000	11/87
159000	12/87
170000	02/88
171000	04/88
172000	06/88

Ser No	Date
173000	08/88
174000	10/88
175000	11/88
176000	01/89
177000	03/89
178000	04/89
179000	07/89
190000	09/89
191000	11/89
192000	01/90
193000	03/90
194000	05/90
195000	07/90
196000	10/90
197000	12/90
198000	03/91
199000	06/91
210000	09/91
211000	12/91
212000	04/92
213000	06/92
214000	09/92
215000	12/92
216000	02/93
217000	05/93
218000	08/93
219000	12/93

Ser No	Date
230000	02/94
231000	05/94
232000	08/94
233000	10/94
234000	12/94
235000	02/95
236000	05/95
237000	08/95
238000	11/95
239000	01/96
250000	03/96
251000	06/96
252000	09/96
253000	12/96
254000	03/97
255000	05/97
256000	08/97
257000	10/97
258000	01/98
259000	03/98
270000	05/98
271000	07/98
272000	10/98
273000	12/98
274000	02/99
275000	04/99
276000	06/99

Ser No	Date
277000	08/99
278000	10/99
279000	12/99
290000	02/00
291000	04/00
292000	06/00
293000	08/00
294000	11/00
295000	02/01
296000	05/01
297000	07/01
298000	09/01
299000	01/02
310000	04/02
311000	07/02
312000	10/02
313000	01/03
314000	04/03
315000	07/03
316000	11/03
317000	03/04
318000	04/04
330000	04/04
331000	07/04
332000	10/04
333000	12/04
334000	04/05

Ser No	Date
335000	05/05
336000	11/05
337000	11/05
338000	03/06
339000	04/06
350000	08/06
351000	01/07
352000	04/07
353000	09/07
354000	01/08
355000	08/08

***All Serial Number Dates are approximate**

© 2009 Waltco Lift Corp. All rights reserved

WALTCO approximate serial number dates.

Shipped From Warehouses

Marietta (Georgia)

Ser No	Date
M1000	12/87
M1100	12/88
M1500	04/89
M2000	03/90
M2500	12/90
M3000	09/91
M3500	07/92
M4000	04/93
M4500	02/94
M5000	06/94
M5500	11/94
M6000	04/95
M6500	09/95
M7000	04/96
M7500	10/96
M8000	04/97
M8500	09/97

Ser No	Date
M9000	02/98
M9500	06/98
M10000	09/98
M10500	01/99
M11000	04/99
M11500	08/99
M12000	01/00
M12500	09/00
M13000	10/00
M13500	02/01
M14000	07/01
M14500	01/02
M15000	06/02
M15500	01/03
M16000	07/03
M16500	11/03
M17000	04/04

Ser No	Date
M17500	07/04
M18000	10/04
M19000	01/05
M19500	04/05
M20000	01/06
M20500	03/06
M21000	08/06
M21500	01/07
M21600	03/07
M21700	04/07
M21800	05/07
M21900	07/07
M22000	08/07
M22100	11/07
M22200	12/07
M22300	01/08
M22600	06/08

Others

Ser No	Date
D1000	01/91
D2000	06/92
D3000	03/94
D4000	03/95
D5000	11/96
D6000	04/98
D7000	04/99
F1000	02/00
S1000	04/00
A1000	04/00
T8000	05/00
T9000	09/02
T9500	11/03
T9900	06/04

Burlington (Wisconsin)

Ser No	Date
W1000	11/94
W1100	02/95
W1200	04/95
W1300	06/95
W1400	08/95
W1500	10/95
W1600	12/95
W1700	03/96
W1800	05/96
W1900	08/96
W2000	09/96
W2100	12/96
W2200	02/97
W2300	04/97
W2400	06/97
W2500	08/97

Ser No	Date
W2600	10/97
W2700	12/97
W2800	01/98
W2900	06/98
W3000	07/98
W3100	09/98
W3200	12/98
W3300	03/99
W3400	05/99
W3500	07/99
W3600	09/99
W3700	10/99
W3800	12/99
W3900	03/00
W4000	04/00
W4100	05/00

Ser No	Date
W4200	07/00
W4300	09/00
W4400	11/00
W4500	01/01
W4600	03/01
W4700	05/01
W4800	07/01
W4900	10/01
W5000	12/01
W5100	12/01
W5200	02/02
W5300	03/02
W5400	06/02
W5500	07/02
W5600	09/02
W5700	01/03

Ser No	Date
W5800	01/03
W5900	02/03
W6000	04/03
W6100	06/03
W6200	08/03
W6300	10/03
W6400	01/04
W6500	03/04
W6600	06/04
W6700	09/04
W6800	12/04
W6900	02/05
W7000	05/05

***All Serial Number Dates are approximate**

MISC.

Ser No	Date
CMC100	05/07
CMC200	07/07
CMC300	09/07
CMC400	10/07
CMC500	12/07
CMC600	01/08
CMC700	06/08

Ser No	Date
CMT100	05/07
CMT200	
CMT300	
CMT400	
CMT500	
CMT600	

© 2009 Waltco Lift Corp. All rights reserved