RoRo

Shore power connection access door

Access for shore power connection

The governing of fuel emissions for ships in port has led to a growing momentum towards stricter rules and regulations for environmental and health issues. This has resulted in increased availability of shore power connections for *cold ironing*.

As more ships turn off their power and connect shore-side, Cargotec's engineers have developed a MacGregor door to enable the feed and connection of shore power cables through a dedicated hull opening, into the vessel.

Planning the door

The aim is to design a MacGregor door which is efficient, economic and safe, while fully meeting the specific operating requirements. The more information that can be given on these prerequisites, the greater the chance to find the optimum solution.

Under the following headings information requirements can found before commencing the project. If these answers are available at the earliest stage possible, work will be saved during the later stages, gaining valuable time by shortening the lead time between initial contact and delivery.

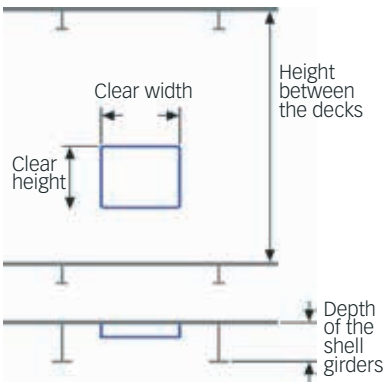

Measurements such as depth of shell girder and door clear opening are important to know when planning.

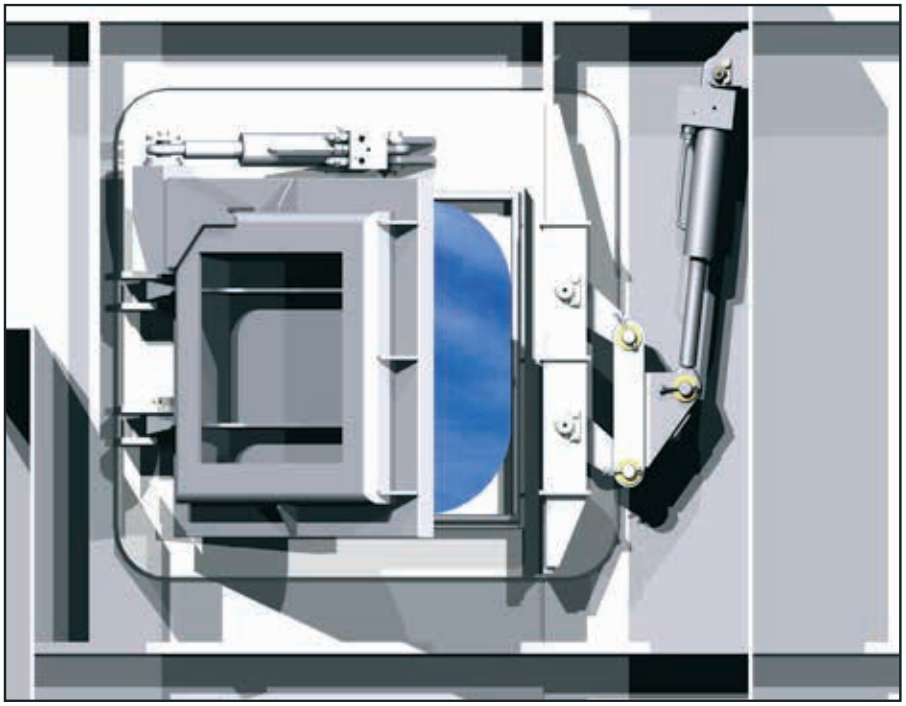

Hydraulic cylinders control the door opening/closing/securing

Door layout

In order to establish the layout of the door we require information about the location of the door and drawings of the ship. Has the ship double hull, a side casing or open web construction? Is the door located in a straight or curved area of the shell? Are there transverse bulkheads, stair-ways or other items intruding in the door opening area? Two measurements are important for the planning: the depth of the shell girders and the door clear opening (fig. 1).

Interface between door and ship

When designing the hull in the area of the door, adequate space must be reserved for the door and its associated equipment. In most cases the door requires a space of about 150 mm around the perimeter for the rubber packing. If further assistance is needed during the design phase, please do not hesitate to contact us. In addition space is needed for both the stowing and operation of the door.

Operating options

The door can be operated by the following methods:

- Direct-acting hydraulic cylinders
- Electric drive operation

In the case of hydraulic cylinders, several benefits are gained by utilizing a mini-power pack rather than a central power pack. To install a mini power pack near a small door instead of connecting the door to a central power pack has some advantages:

- Less hydraulic piping in the ship
- Less piping in sensitive accomodation areas

The mini power pack is complete, consisting of a tank, electric driven hydraulic pump, operating valves, and a hand-pump for emergency operation.

In the electric powered option the door is operated by electric actuators.

Sealing and securing quality

MacGregor's engineers have developed an efficient and secure watertight seal. The result is a simple but high-performance design. A rubber packing is placed in and around the perimeter of the hull opening. The rubber packing is pressed against stainless steel compression bars.

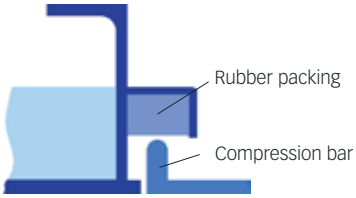

Conventional seal design

These have a very smooth surface to protect against any ingress of water. The door is secured in the closed position by hydraulically/electrically operated securing devices, positioned in accordance with classification society rules and regulations.

MacGregor's innovations are well-proven and can be relied upon.

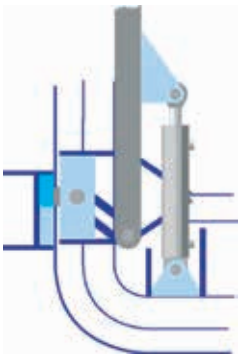

Finger cleat for securing the door in closed position

ISO9001 • ISO14001
OHSAS 18001
001
UKAS MANAGEMENT SYSTEMS

Lloyd's Register Quality Assurance certifies that the Quality Management System for MacGregor is ISO 9001:2008 compliant.

***MacGregor** is the world's leading brand of engineering solutions and services for handling marine cargoes and offshore loads. MacGregor products serve the maritime transportation, offshore and naval logistics markets, in ports and terminals as well as on board ships. Our cargo flow solutions integrate cargo access, stowage, care and handling functions to suit a particular ship's cargo profile. This benefits its productivity, environmental impact and profitable service lifetime.*

***MacGregor** is part of Cargotec. Cargotec's class B shared are quoted on NASDAQ OMX Helsinki.*

***Published by MacGregor.** Copyright © MacGregor January 2014. All rights reserved. No part of this publication may be reproduced, stored, photocopied, recorded or transmitted without permission of the copyright owner.*

MACGREGOR

MacGregor Sweden AB
RoRo
P.O. Box 4113,
SE-400 40 Gothenburg
Sweden
Tel. +46 31 85 07 00
rorosales@macgregor.com
roroconversion@macgregor.com
www.macgregor.com